OMRON

Floatless Level Switch (Compact, Plug-in Type)
61F-LS

Consolidates the Specifications through Free Power Supply, thus Allowing Use in High Temperature Environments with Temperatures of Up to 70°C*

For the most recent information on models that have been certified for safety standards, refer to your OMRON website.

⚠ Refer to *Safety Precautions* on page 12.

<Normal / High functionality type>
- Compact form allows space-saving design
- Increase in number of models in which wiring of up to 4 km is possible
- Easy to replace during maintenance due to compatibility with the 61F-GP-N series
- Dip switches allow switching of the response speed and operation sensitivity

<DC power supply type>
- Battery for use in locations without AC power supply
- Adjustable sensitivity, with an operating resistance range of 0 to 100 kΩ, allows use for a wide variety of liquids
- NPN output type available
- Allows switching and selection of water supply and drainage

* Excluding the DC power supply type.

Model Number Legend (Not all models in this model number structure can be created.)

61F-LS-CP□-□□□
(1) (2) (3) (4) (5) (6)

(1) Control Applications
LS: Automatic water supply and drainage

(2) Structure
CP: Compact, plug-in

(3) No. of Pins
11: 11 pins
08: 8 pins

(4) Function
N: Normal type
S: High functionality (sequential operation)
A: High functionality (advanced operation)
B: DC power supply

(5) Output
T: Transistor
R: Relay

(6) Supply Voltage
A: 100 - 240 VAC
B: 24 VAC
C: 24 VDC

Ordering Information

Type	Pin type	Output	Supply Voltage	Model
Normal	11-pin	Relay	100 to 240 VAC	**61F-LS-CP11-NRA**
	8-pin			**61F-LS-CP08-NRA**
High functionality (sequential operation)	11-pin			**61F-LS-CP11-SRA**
	8-pin			**61F-LS-CP08-SRA**
	8-pin		24 VAC	**61F-LS-CP08-SRB**
High functionality (advanced operation)	11-pin		100 to 240 VAC	**61F-LS-CP11-ARA**
	8-pin			**61F-LS-CP08-ARA**
	8-pin		24 VAC	**61F-LS-CP08-ARB**
DC power supply	11-pin	Transistor	24 VDC	**61F-LS-CP11-BTC**
	11-pin	Relay		**61F-LS-CP11-BRC**

Accessories (Order Separately)

Connectable Level Switch	Type	Model
61F-LS-CP11-□	Front Connecting Socket	**PF113A**
61F-LS-CP08-□		**PF083A**

Specifications

Ratings

	61F-LS-CP□-N (Normal)	61F-LS-CP□-S/-A (High functionality)	61F-LS-CP11-B (DC power supply)
Controlling materials and operating conditions	• For control of ordinary purified water or sewage water • For control of ordinary purified water or sewage where operating ambient temperature is high. • For control of ordinary purified water in cases where the distance between sewage pumps and water tanks or between receiver tanks and supply tanks is long or where remote control is required.	• For control of liquids with high specific resistance such as distilled water • For control of liquids with low specific resistance such as salt water, sewage water, acid chemicals, alkali chemicals	• When using DC power • When using battery power, etc.
Supply voltage/frequency	100 - 240 VAC 50/60 Hz	100 - 240 VAC 50/60 Hz 24 VAC 50/60 Hz	24 VDC
Operating voltage range	85% to 110% of rated voltage	85% to 110% of rated voltage	85% to 110% of rated voltage
Operating frequency range	±5 Hz of the rated frequency	±5 Hz of the rated frequency	±5 Hz of the rated frequency
Power consumption	Approx. 3.2 VA max.	Approx. 3.2 VA max.	Approx. 1 W max.
Contact ratings	5 A at 250 VAC (Resistive load (cosϕ = 1)) 1 A at 250 VAC (Inductive load (cosϕ = 0.4)) Minimum applicable load 5 VDC, 1 mA (reference value)	5 A at 250 VAC (Resistive load (cosϕ = 1)) 1 A at 250 VAC (Inductive load (cosϕ = 0.4)) Minimum applicable load 5 VDC, 1 mA (reference value)	Transistor output Open collector (NPN) 30 VDC, 100 mA, leak current 100 μA or less Relay output (1a) 30 VDC 5 A, 240 VAC 5 A (resistive load) Minimum applicable load 5 VDC, 10 mA (reference value)
Ambient temperature	-10 to +70°C	-10 to +70°C	-10 to +55°C
Ambient humidity	25 to 90% RH	25 to 90% RH	25 to 85% RH
Ambient storage temperature	-10 to +70°C	-10 to +70°C	-10 to +55°C
Ambient storage humidity	25 to 90% RH	25 to 90% RH	25 to 85% RH
Weight	Approx. 100 g	Approx. 100 g	Approx. 100 g
Accessories	PFC-N8		
Wiring distance ✻1	4 km or less	Ultra low-sensitivity, low-sensitivity, general-sensitivity: 4 km High-sensitivity: 50 m Ultra high-sensitivity: 30 m	100 m or less

✻1. Reference values. The wiring distance indicates the values when completely-insulated, 3-core 0.75 mm^2, 600-V VCT cables are used.

Characteristics

	61F-LS-CP□-N (Normal)	61F-LS-CP□-S/-A (High functionality)	61F-LS-CP11-B (DC power supply)
Operation resistance	4 kΩ or more	✻2	Variable (0 to 100 kΩ)
Operation resistance error	---	---	Scale 0 : 0 to 10 kΩ ✻3 Scale 100 : 100 ± 10 kΩ
Release resistance	15 kΩ or less	✻2	200% max. of the operation resistance
Interelectrode voltage	5 VAC	5 VAC	5 VAC
Response time	Operate: 80 ms max. Release: 160 ms max.	✻2	Operate: 1.5 s max. Release: 3.0 s max.
Startup lock time	3 s after turning on the power supply (The LED blinks during the startup lock time)		
Insulation resistance ✻4	100 MΩ min. (at 500 VDC)		
Dielectric strength ✻4	2000 VAC, 50/60 Hz for 1 min.		
Life expectancy	Electrical: 100,000 operations min. Mechanical: 5,000,000 operations min.	Electrical: 100,000 operations min. Mechanical: 5,000,000 operations min.	Relay specification only Electrical: 70,000 operations min. Mechanical: 20,000,000 operations min.
Switching between supply and drainage	---	---	Terminals 7 and 8 open: Automatic drainage operation Terminals 7 and 8 shorted: Automatic supply operation
Approved standards	UL61010-1, CAN/CSA C22.2 No.61010-1 CE, RCM EN61010-1, EN61326-1 Industrial electromagnetic environment		

✻2. Refer to 3 page *Dip Switch Settings*.
✻3. The Detector may not operate around the setting value of “0.” Adjust the sensitivity depending on the actual application.
✻4. The insulation resistance and dielectric strength indicate values between power terminals and Electrode terminals, between power terminals and contact terminals, and between Electrode terminals and contact terminals. Refer to *Safety Precautions* on page 12.

Dip Switch Settings (61F-LS-CP□-S/-A only)

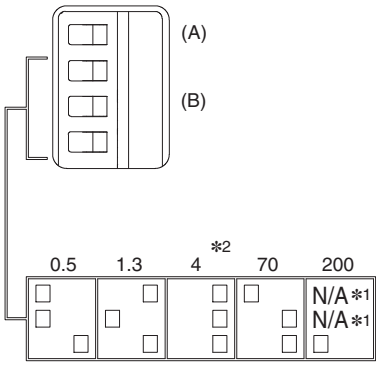

Symbol	Item	Specification		Notes	Factory default settings
(A)	Response speed	5S			
		INSTANT (Instantaneous)			✓
(B)	Operation sensitivity	Operation resistance	Release resistance		
		0.5 kΩ or more	2.5 kΩ or less	Ultra low-sensitivity	
		1.3 kΩ or more	4 kΩ or less	Low-sensitivity	
		4 kΩ or more	15 kΩ or less	General-purpose	✓
		70 kΩ or more	300 kΩ or less	High-sensitivity	
		200 kΩ or more	500 kΩ or less	Ultra high-sensitivity	

***1.** N/A indicates that the switch operates whether it is set ON or OFF.
***2.** “0.5, 1.3, 4, 70, 200” indicate the values of operation resistance.

Nomenclature

61F-LS-CP□-N

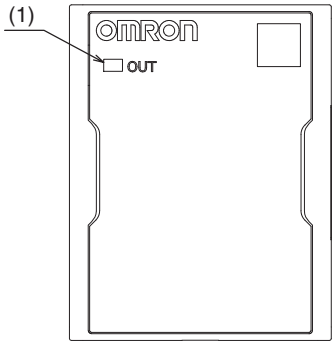

Symbol	Name	Function
(1)	[OUT] indicator (red)	Lit: Indicates that water has been detected. Unlit: Indicates standby state.
		Blinking: Indicates that power has turned on. (3 seconds when power is turned on)

61F-LS-CP□-S/-A

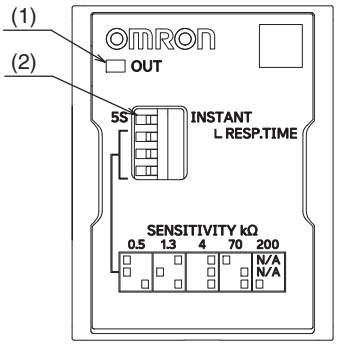

Symbol	Name	Function
(1)	[OUT] indicator (red)	Lit: Indicates that water has been detected. Unlit: Indicates standby state.
		Blinking: Indicates that power has turned on. (3 seconds when power is turned on)
(2)	Sensitivity adjustment switch	Sets response speed/operation sensitivity.

61F-LS-CP11-B

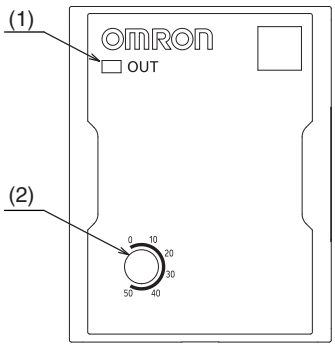

Symbol	Name	Function
(1)	[OUT] indicator (red)	Lit: Indicates that water has been detected. Unlit: Indicates standby state.
		Blinking: Indicates that power has turned on. (3 seconds when power is turned on)
(2)	Sensitivity adjustment volume	Sets operation resistance between 0 and 100 kΩ.

Internal Circuit Diagrams

61F-LS-CP08-N
61F-LS-CP08-S

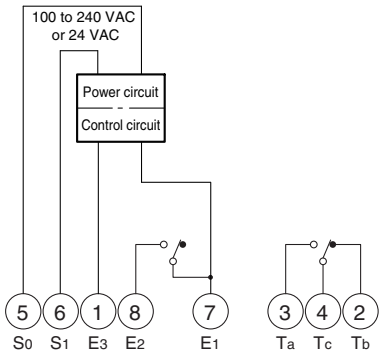

61F-LS-CP11-N
61F-LS-CP11-S

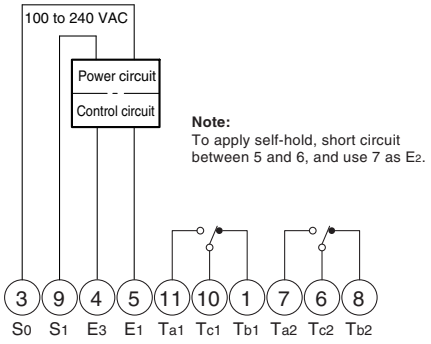

61F-LS-CP11-B

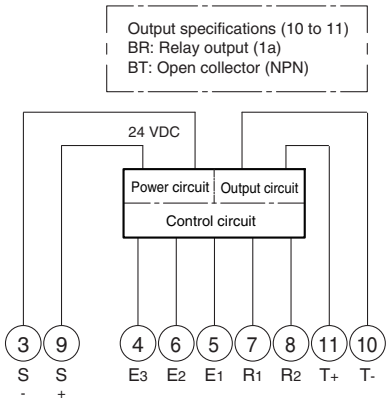

Note: Output is inverted when 7 and 8 are short-circuited.

61F-LS-CP08-A

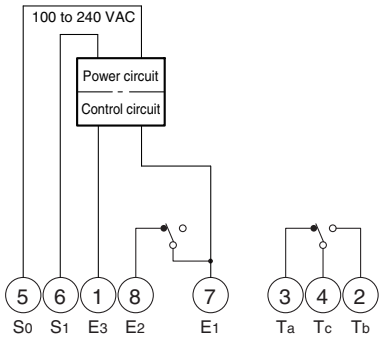

61F-LS-CP11-A

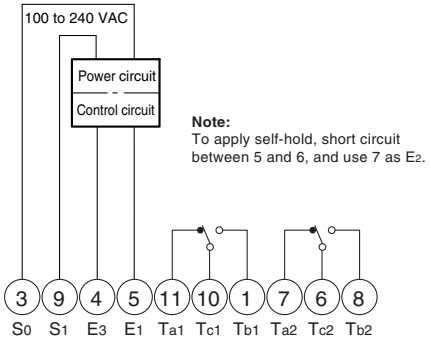

Difference between Sequential Operation and Advanced Operation

Normally, the a contact of the internal relay is connected to the terminal indicated as Ta on the relay unit, and the b contact is connected to the one indicated as Tb. This connection is sequential operation.
The type with the b contact of the internal relay connected to the Ta terminal, and the a contact connected to the Tb terminal is called advanced operation.
If you look at the terminal numbers, you will see that there is no need to worry about the difference because the operation after the power turns ON is the same for both advanced operation and sequential operation.

Caution

With advanced operation, there will be continuity between the Tc terminal and Ta terminal (b contact) when the power is OFF.
When advanced operation is used with waste water or upper-limit alarms, pay attention to the circuit configuration to prevent the pump operating and a warning being output when the power is OFF.
In addition, the operation differs when the water level is between E_1 and E_2 immediately after the power turns ON.
Unless there are special circumstances, sequential operation is recommended.

Compact, plug-in type

Operation examples of advanced operation and sequential operation (when automatic control)

Power state	Water level	Advanced operation			Sequential operation	
		8-pin	11-pin without self-hold function	11-pin with self-hold function	8-pin	11-pin ✻
		61F-LS-CP08-A	61F-LS-CP11-A	61F-LS-CP11-A	61F-LS-CP08-N 61F-LS-CP08-S	61F-LS-CP11-N 61F-LS-CP11-S
Before power-on	---	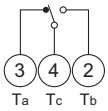 Continuity between No. 4 and No. 3	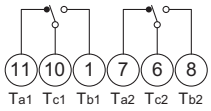 Continuity between No. 10 and No. 11, and No. 6 and No. 7	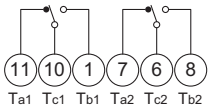 Continuity between No. 10 and No. 11, and No. 6 and No. 7	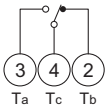 Continuity between No. 4 and No. 2	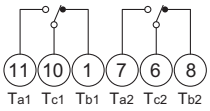 Continuity between No. 10 and No. 1, and No. 6 and No. 8
After power-on	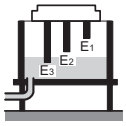 E3 or more	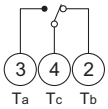 Continuity between No. 4 and No. 2	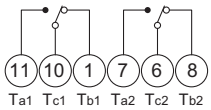 Continuity between No. 10 and No. 1, and No. 6 and No. 8	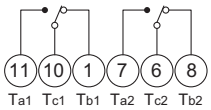 Continuity between No. 10 and No. 1, and No. 6 and No. 8	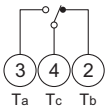 Continuity between No. 4 and No. 2	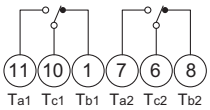 Continuity between No. 10 and No. 1, and No. 6 and No. 8
	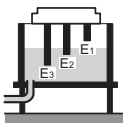 Less than E_1, E_2 or more	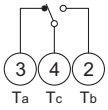 Continuity between No. 4 and No. 3	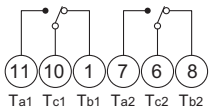 Continuity between No. 10 and No. 1, and No. 6 and No. 8	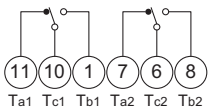 Continuity between No. 10 and No. 11, and No. 6 and No. 7	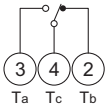 Continuity between No. 4 and No. 2	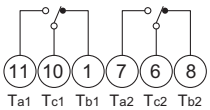 Continuity between No. 10 and No. 1, and No. 6 and No. 8
	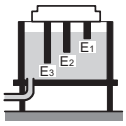 E_1 or more	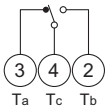 Continuity between No. 4 and No. 3	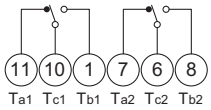 Continuity between No. 10 and No. 11, and No. 6 and No. 7	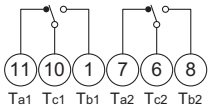 Continuity between No. 10 and No. 11, and No. 6 and No. 7	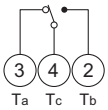 Continuity between No. 4 and No. 3	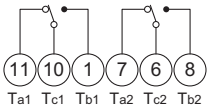 Continuity between No. 10 and No. 11, and No. 6 and No. 7
After power interruption	---	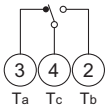 Continuity between No. 4 and No. 3	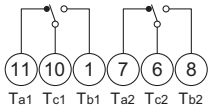 Continuity between No. 10 and No. 11, and No. 6 and No. 7	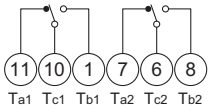 Continuity between No. 10 and No. 11, and No. 6 and No. 7	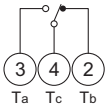 Continuity between No. 4 and No. 2	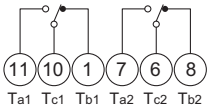 Continuity between No. 10 and No. 1, and No. 6 and No. 8

✻ In sequential operation, 11-pin with self-hold function and the one without self-hold function has the same operation.

Connections

Automatic Water Supply and Drainage Control

Compact, Plug-in Type
61F-LS-CP11-N

Dimensions: page 11

Automatic Water Supply Control	Automatic Drainage Control

Connections

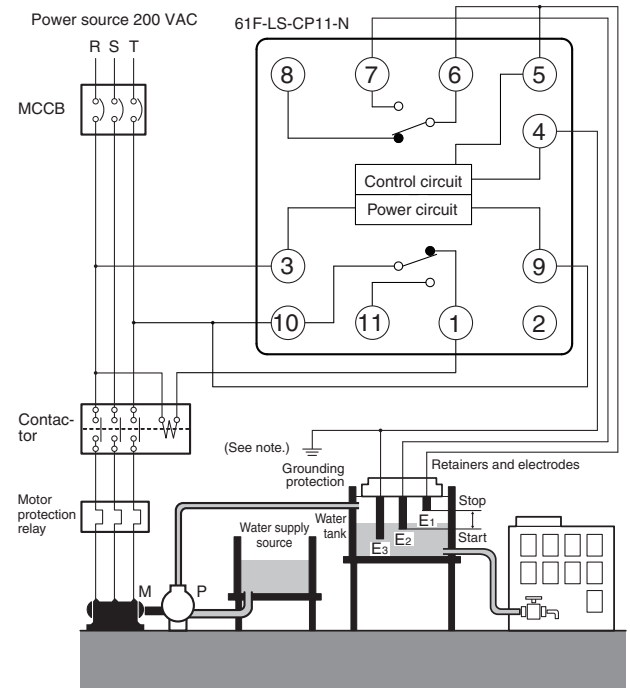

Note: Be sure to ground the common Electrode E_3 (the longest Electrode).

Connection Sockets
PF113A (Front-connecting)
PL11 (Rear-connecting)

Connect terminal 1 to the contactor's coil terminal.

Connections

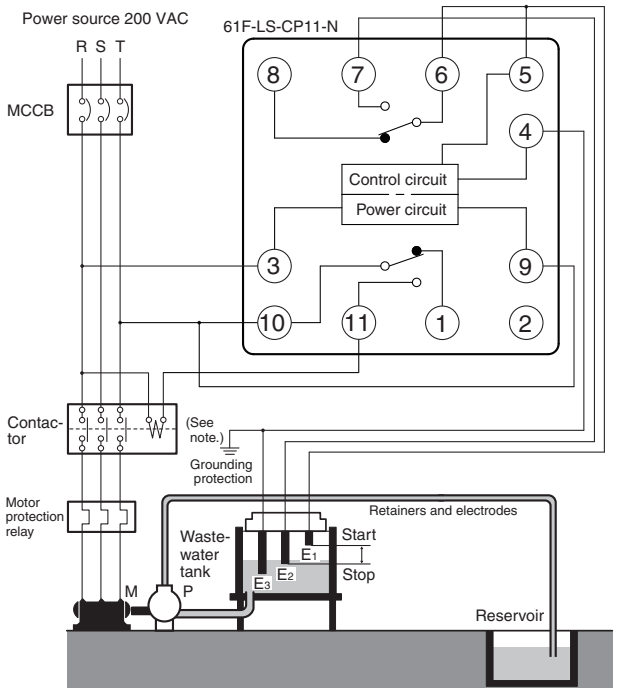

Note: Be sure to ground the common Electrode E_3 (the longest Electrode).

Connection Sockets
PF113A (Front-connecting)
PL11 (Rear-connecting)

Connect terminal 1 to the contactor's coil terminal.

Principles of Operation

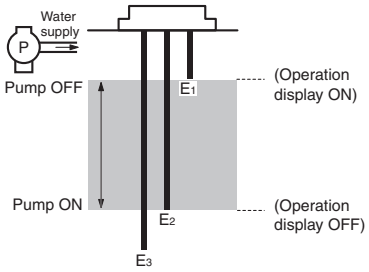

The pump stops when the water level reaches E_1 (operation display ON) and starts when the water level drops below E_2 (operation display OFF).

Timing Chart

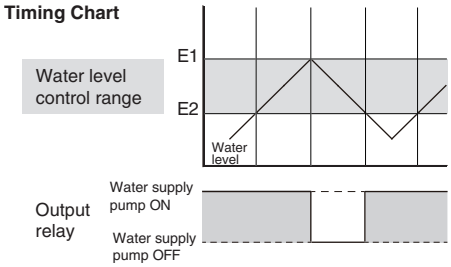

Principles of Operation

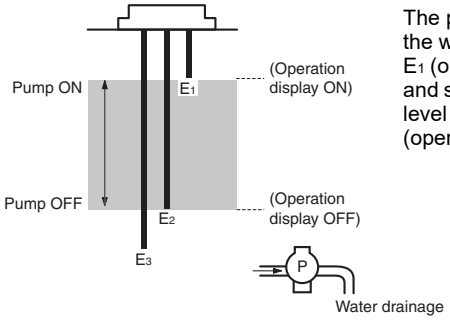

The pump starts when the water level reaches E_1 (operation display ON) and stops when the water level drops below E_2 (operation display OFF).

Timing Chart

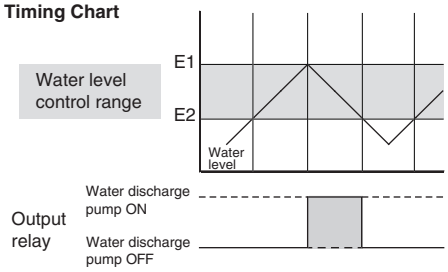

Liquid Level Indication (Connection Example)

Compact, Plug-in Type
61F-LS-CP11-N

Dimensions: page 11

Liquid Level Indication

Connections

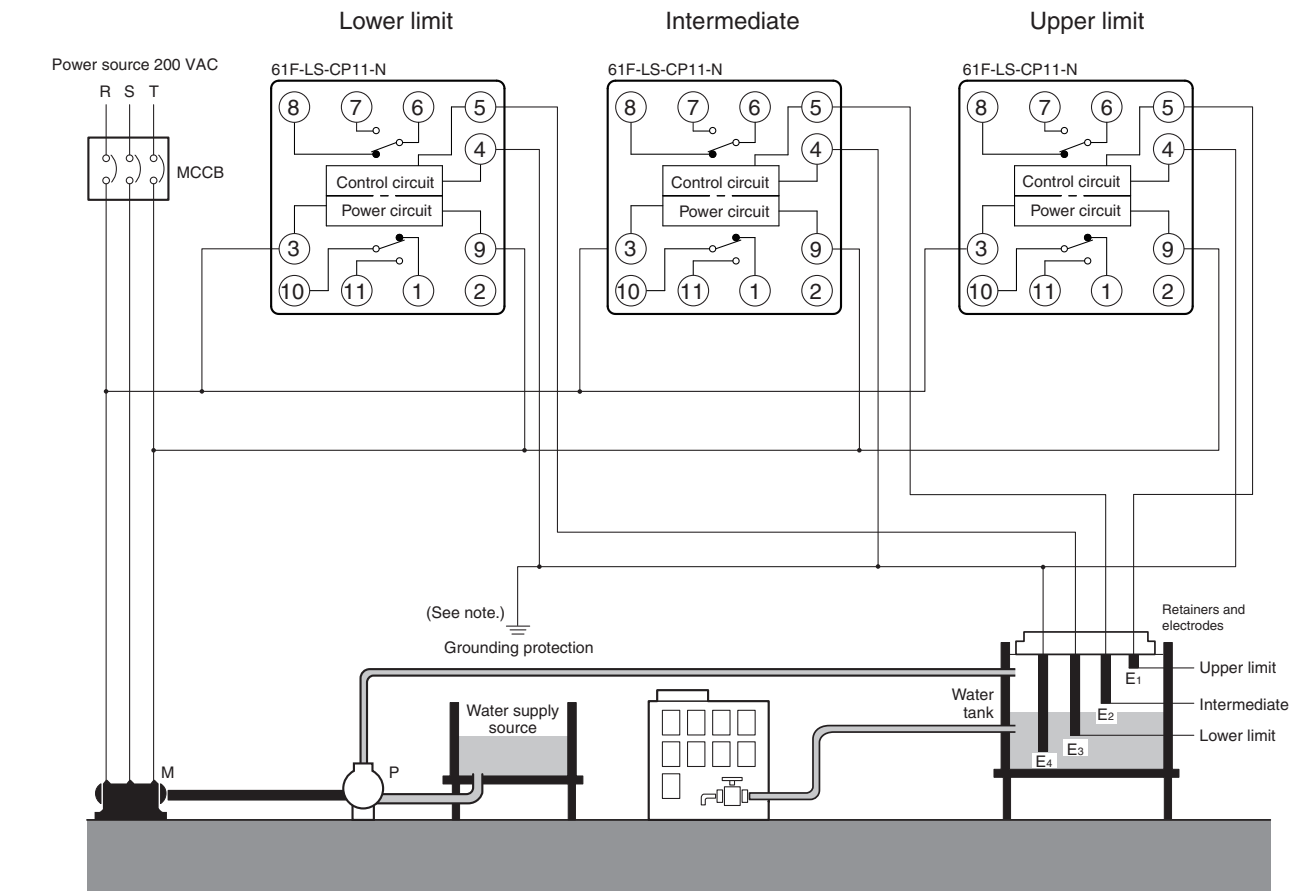

Note: 1. The power supply phases (terminals 3 to 9) can be matched to use the same ground for the common Electrode (the longest Electrode, terminal 4).
2. For stable operation, when using multiple 61F units in the same tank with a common electrode, please unify them to 61F-LS series. If unification is not possible, please use the high functionality product.
3. Be sure to verify that your application works as intended.

Principles of Operation

- Terminals 6 and 7, and terminals 10 and 11 on the lower -limit 61F-LS-CP11 are shorted when the water level reaches E_3 (operation display ON).
- Terminals 6 and 7, and terminals 10 and 11 on the intermediate 61F-LS-CP11 are shorted when the water level reaches E_2 (operation display ON).
- Terminals 6 and 7, and terminals 10 and 11 on the upper-limit 61F-LS-CP11 are shorted when the water level reaches E_1 (operation display ON).

Replacing 61F-G3N Functions (Automatic Water Supply Control with Abnormal Water Increase and Water Shortage Alarms)

Compact, Plug-in Type
61F-LS-CP11-N

Dimensions: page 11

Replacing 61F-G3N Functions

Connections

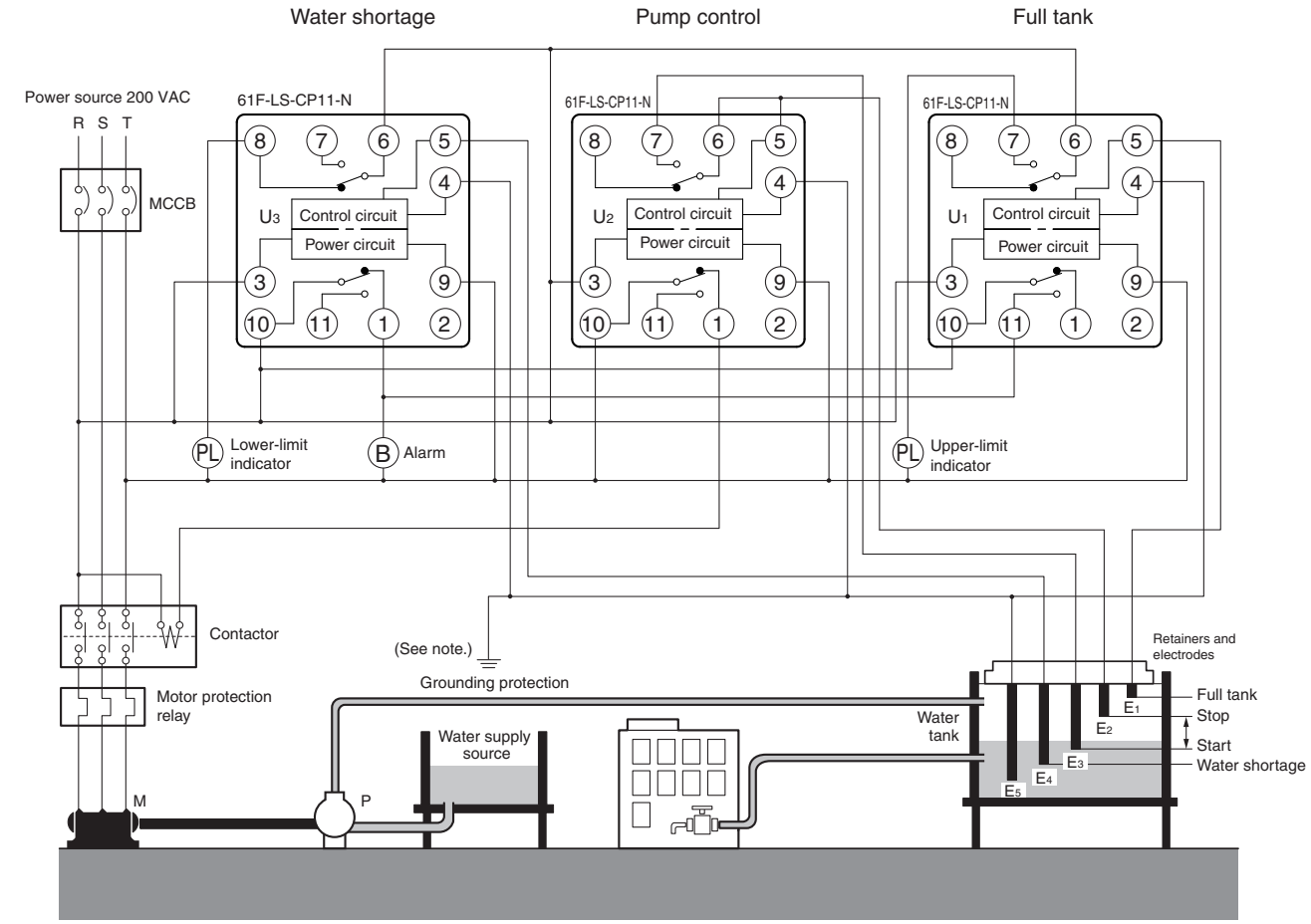

Note: 1. The power supply phases (terminals 3 to 9) can be matched to use the same ground for the common Electrode (the longest Electrode, terminal 4).
2. For stable operation, when using multiple 61F units in the same tank with a common electrode, please unify them to 61F-LS series. If unification is not possible, please use the high functionality product.
3. Be sure to verify that your application works as intended.

Principles of Operation

- The pump stops when the water level reaches E_2 (U_2 operation display ON) and starts when the water level drops below E_3 (U_2 operation display OFF).
- If the water level rises to E_1 for any reason, the upper-limit indicator turns ON and the alarm sounds (U_1 operation display ON).
  If the water level drops below E_4 for any reason, the lower-limit indicator turns ON and the alarm sounds (U_3 operation display OFF).

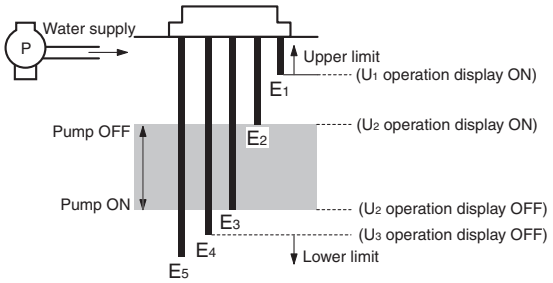

Timing Chart

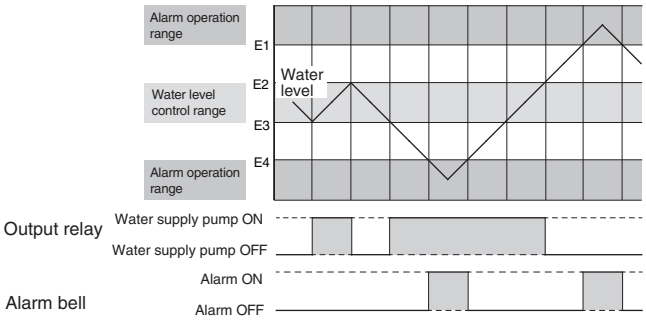

Automatic Water Supply and Drainage Control

Compact, Plug-in Type

61F-LS-CP08-N

Dimensions: page 11

Automatic Water Supply Control

Connections

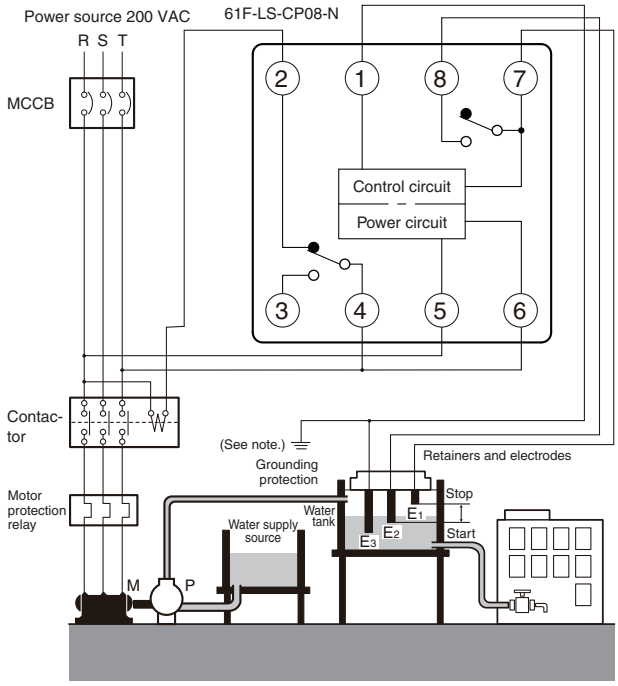

Note: Be sure to ground the common Electrode E_3 (the longest Electrode).

Connection Sockets
PF083A (Front-connecting)
PL08 (Rear-connecting)

- Connect terminal 2 to the contactor's coil terminal.

Principles of Operation

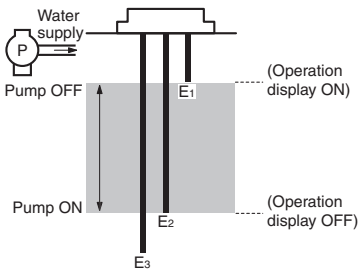

The pump stops when the water level reaches E_1 (operation display ON) and starts when the water level drops below E_2 (operation display OFF).

Timing Chart

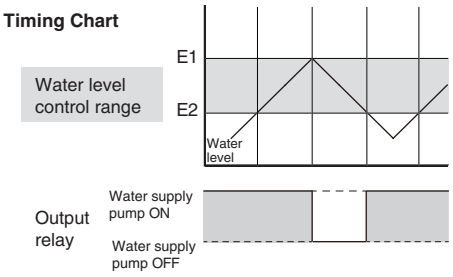

Automatic Drainage Control

Connections

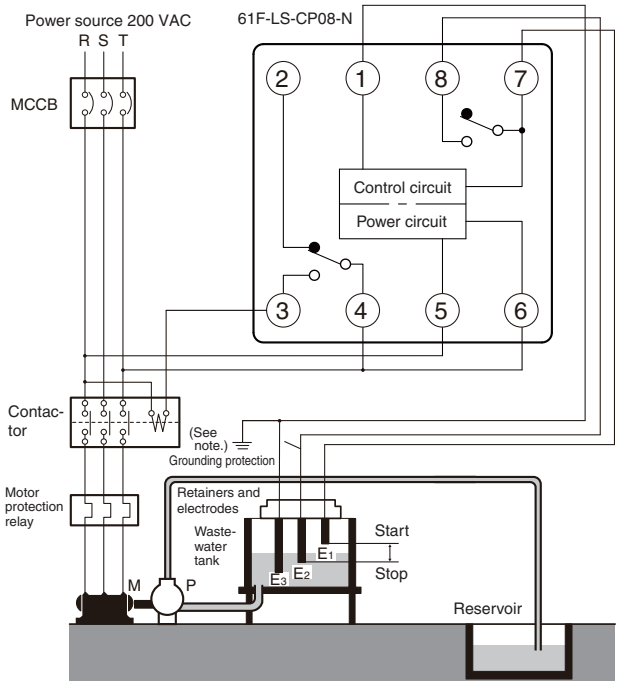

Note: Be sure to ground the common Electrode E_3 (the longest Electrode).

Connection Sockets
PF083A (Front-connecting)
PL08 (Rear-connecting)

- Connect terminal 3 to the contactor's coil terminal.

Principles of Operation

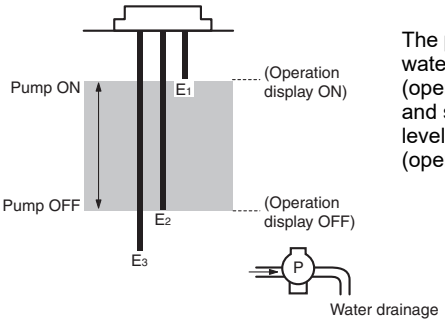

The pump starts when the water level reaches E_1 (operation display ON) and stops when the water level drops below E_2 (operation display OFF).

Timing Chart

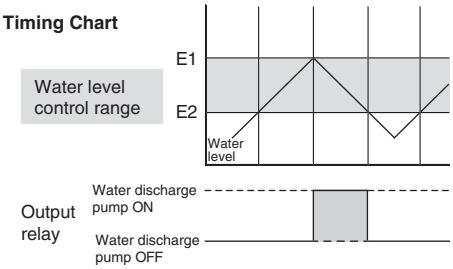

Automatic Water Supply and Drainage Control

Compact, Plug-in Type
61F-LS-CP11-B

Dimensions: page 11

Water Supply	Water drainage

Connections

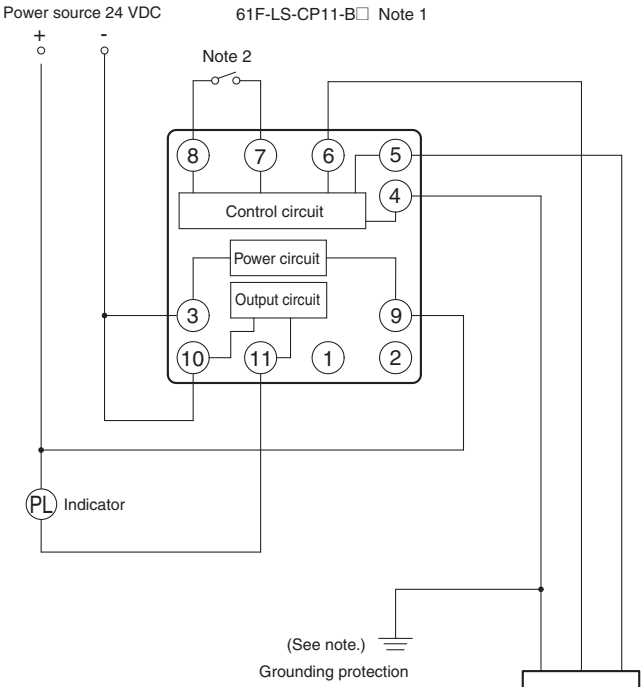

Note: Be sure to ground the common Electrode E_3 (the longest Electrode).

Note 1. BR: Relay output (1a) BT: Open collector (NPN)
Note 2. Output is inverted when 7 and 8 are short-circuited.

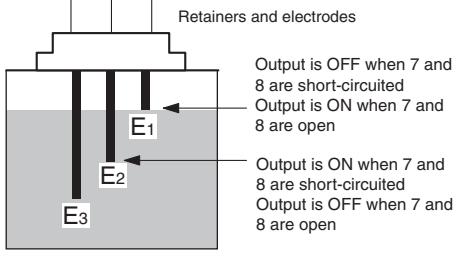

Principles of Operation Water Supply

When 7 and 8 are short-circuited

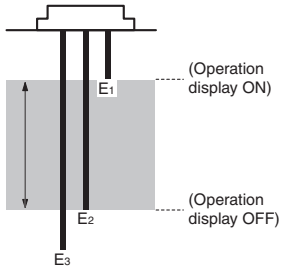

Operation display turns OFF when the water level reaches E_1 and turns ON when the water level drops below E_2.

Timing Chart

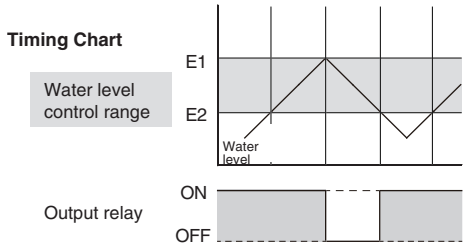

Principles of Operation Water drainage

When 7 and 8 are open

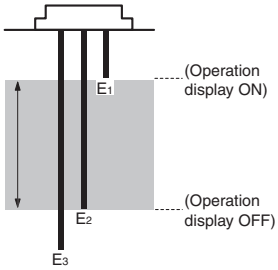

Operation display turns ON when the water level reaches E_1 and turns OFF when the water level drops below E_2.

Timing Chart

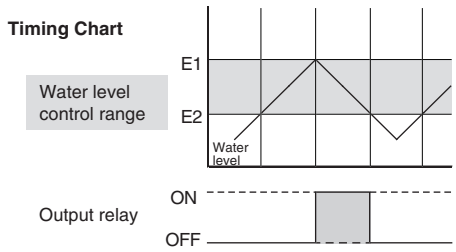

Dimensions

(Unit: mm)

61F-LS-CP11-□

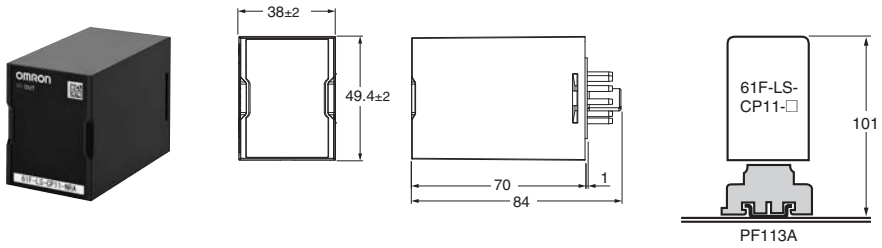

Use a PFC-N8 Mounting Bracket to mount the Level Controller to a PF113A Rail-mounted Socket.

PFC-N8

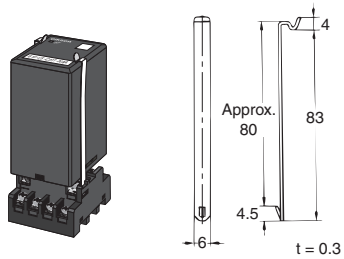

Note: PFC-N8 Mounting Bracket (provided with 61F-LS)

61F-LS-CP08-□

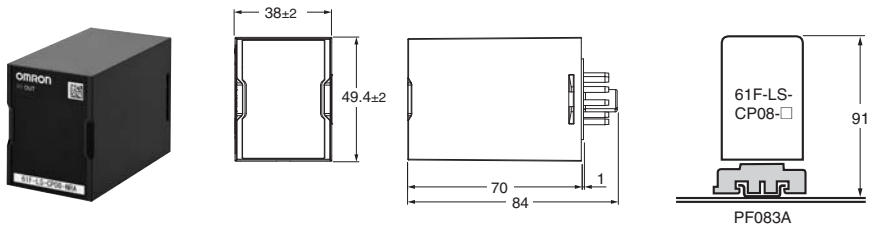

Use a PFC-N8 Mounting Bracket to mount the Level Controller to a PF083A Rail-mounted Socket.

PFC-N8

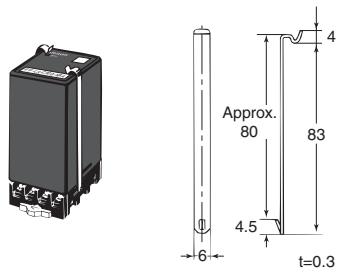

Note: PFC-N8 Mounting Bracket (provided with 61F-LS)

Replacement for the level switch 61F-GPN series/61F-GP-N series is as follows.

Type	Previous	New
DC power specification	61F-GPN-BC DC24V	61F-LS-CP11-BRC
	61F-GPN-BT DC24V	61F-LS-CP11-BTC
General-purpose	61F-GP-N8 AC□□V	61F-LS-CP08-NRA
	61F-GP-N AC□□V	61F-LS-CP11-NRA
Long-distance wiring 2 km	61F-GP-N8L 2KM AC□□V	61F-LS-CP08-NRA
	61F-GP-NL 2KM AC□□V	61F-LS-CP11-NRA
Long-distance wiring 4 km	61F-GP-N8L 4KM AC□□V	61F-LS-CP08-NRA
	61F-GP-NL 4KM AC□□V	61F-LS-CP11-NRA
High-temperature	61F-GP-NT AC□□V	61F-LS-CP11-NRA
Low-sensitivity	61F-GP-N8D AC□□V	61F-LS-CP08-SRA
	61F-GP-ND AC□□V	61F-LS-CP11-SRA
High-sensitivity	61F-GP-N8HY AC□□V	61F-LS-CP08-SRA
	61F-GP-N8H AC□□V	61F-LS-CP08-ARA
	61F-GP-NH AC□□V	61F-LS-CP11-ARA
Ultra high-sensitivity	61F-GP-NH3 AC□□V	
Advanced operation	61F-GP-N8Y AC□□V	61F-LS-CP08-ARA

Note: 1. Take note that in case of 61F-LS, after turning on the power supply, there is a startup lock time of 1 to 3 seconds and the product cannot be operated during this time.
2. Operation sensitivity of the 61F-LS-CPD-S/-A (high functionality) can be switched using the DIP switch.
3. For stable operation, when using multiple 61F units in the same tank with a common electrode, please unify them to 61F-LS series. If unification is not possible, please use the high functionality product.
4. Be sure to verify that your application works as intended.

Safety Precautions

Be sure to read the precautions for all models in the website at the following URL: http://www.ia.omron.com/.

Meanings of the warning indications

⚠ CAUTION	**It may result in minor to moderate injury or property damage due to this risk if the product is not handled correctly.**
Precautions for Safe Use	**It indicates the actions that should be taken or avoided in order to use the product safely.**
Precautions for Correct Use	**It indicates the actions that should be taken or avoided to prevent product inoperability, malfunction, or adverse effects on its performance or functions.**

Meanings of graphic symbols

	Caution on electric shock **A notice that warns of the possibility of electric shock under certain conditions.**
	Prohibition symbols in general **A general and non-specific notice of prohibition.**
	No disassembly **A notice of prohibition where disassembly of the equipment may cause injury such as electric shock.**
	General forced action symbol **A graphic symbol indicating the general action of an unspecified user.**

⚠ CAUTION

Minor injury may be caused by electric shock in rare cases. Turn off the power supply when wiring, and do not touch the terminals while the power is on. Do not touch the product with wet hands.

Slight electric shock, ignition, or equipment failure may occur in rare cases. Do not allow metal, wires, or chips from installation process to enter the product.

If the contact output is suddenly switched due to a failure in the product, physical damage to the facility, equipment, etc. connected to this product may occur in rare cases. Please be sure to conduct periodic inspections on this product.

Minor injury may be caused by explosion in rare cases. Do not use this product under presence of flammable or explosive gases.

Slight electric shock, ignition, or equipment failure may occur in rare cases. Do not disassemble, modify or repair this product, or touch its interior parts.

Precautions for Safe Use

Please be sure to thoroughly read and understand this manual before handling the product.

1. Do not use or store this product under the following environments:
   - Any outdoor environment or one that comes under direct sunlight
   - Any environment where it may be splashed with water or oil
   - Any environment where it is exposed to the weather
   - Any environment where there is significant vibration and impact
   - Any environment where the temperature changes are drastic
   - Any environment where there is a risk of freezing or condensation
   - Any environment where there is dust or corrosive gas (especially sulfide gas, ammonia gas, etc.)
   - Any environment where it may be affected by static electricity or noise
   - Any environment where there are insects or small animals
   - Any environment where it may be splashed with flammable or soluble liquid
   - Any environment where it is exposed to sea breeze
2. Install the product as far away as possible from equipment that generates strong high frequency or surge voltage.
3. Do not place the product on an unstable surface. It poses a risk of the product falling and becoming damaged, or hitting someone and causing injury.
4. Do not use the product if the product is dropped by mistake, as the inside of the product may be damaged.
5. Install a switch or circuit breaker and provide an appropriate indication so that the operator can turn OFF the power immediately.
6. Install the product in the correct orientation.
7. Use the power supply voltage and load within the specifications and ratings.
8. Use a power supply that will reach the rated voltage within 1second after the power is turned ON.
9. Do not connect anything to unused terminals.
10. This product should be handled by a specialist with knowledge about electricity.
11. When using the equipment, make sure to check the wiring before turning on the power.
12. It may be prone to radio disturbance. Do not use any radio wave receivers near the product.
13. Use or store the product while keeping the ambient temperature and humidity within the specification range. In particular, do not install the product close to other heating equipment (equipment containing coil or winding). Implement forced cooling if necessary.
14. It cannot be used for types of oil, etc. that have high specific resistance of liquid and conduct little electricity.
15. Install the product while ensuring not to apply any load on the main body.
16. Check that the output contacts are operating properly. Depending on the operating environment, deterioration of the internal relay may be accelerated and result in malfunction.
17. Check that the indicator LED is operating properly. Depending on the operating environment, deterioration of the LED may be accelerated and result in indication failure.
18. Occurrence of chattering may shorten the life of the output relay in this product. Use a circuit and setting that do not cause chattering.
19. When controlling the contactor opening and closing, be sure to use the self-holding electrode (E2).
    The contactor may flap under the waviness of the liquid surface and burn the contacts when control is executed only with E1.
20. Use the setting volume and DIP switch within the following torque value range:

Setting volume

Rotation torque	Rotation stopping strength
20 mN·m	50 mN·m

DIP switch

Operating Torque
0.29 N to 4.9 N

21. Select the electrodes and electrode holders with consideration of the size of the water tank and the environment inside the water tank (pressure, temperature, controlled liquid, etc.).
22. Refer to the respective manuals for proper installation of the electrodes and electrode holders.
23. Keep suspended matters from adhering to the electrodes.
24. Keep the wiring distance between this product and the electrode holder within the specification range. If the wiring distance is too long, abnormal surge or noise may appear on the electrode circuit and result in abnormal operation.
25. It becomes safe from surges if a surge killer unit (Model 61F-03B or -04B) is connected to the electrode circuit of this product. Be sure to install it especially in areas where lightning frequently occurs. When surge may enter the power supply, it is safer to connect a commercially available surge killer to the power supply circuit.
26. To prevent smoke generation and ignition, check the rating of the wires and use the wires that are listed below.

Type of wire	Wire material	Recommended wire diameter
Single wire/ stranded wire	Copper	0.25 to 1.5 mm^2 AWG24 to AWG16

27. To clean, use commercially available alcohol and no thinners.
28. Dispose of this product as industrial waste.

Precautions for Correct Use

1. It cannot be used for flammable liquids such as gasoline, kerosene, and heavy oil.
2. When measuring the insulation resistance, never conduct megger tests between the electrode terminals.
3. This product requires a certain response time during operation and recovery. Employ caution regarding designs that require subtle timing for sequence control. For details, please check the product specifications for the model to be used.
4. Do not connect multiple units of this product to the same electrode. For example, a closed circuit (circulating circuit) that passes through the internal circuit of each other is formed when the voltage phase of the 5 V AC power supply is reversed, and this product will operate (malfunction) regardless of the water level by only applying the power supply. Use the electrode rods to be connected to multiple units of this product apart from each other so that they do not suffer mutual interference. However, there is no problem with the sharing of common electrode (the longest electrode).
5. Use a separator which is sold separately (Model F03-14) to prevent contact if the electrodes come into contact with each other in the liquid.
6. Make sure that there is no risk of rainwater, etc. accumulating at the connection between the electrodes.
7. Be sure to ground the common electrode terminal. It can reduce the influence of noise.
8. Install the socket and DIN rail with screws to prevent loosening. If the screws are loose, vibration, impact, etc. may cause the DIN rail, socket, product main body, or wiring to come off.
9. When attaching a crimped terminal to a terminal screw, tighten it with the tightening torque within the range from 0.45 to 0.6 N·m.
10. For stable operation, when using multiple 61F units in the same tank with a common electrode, please unify them to 61F-LS series. If unification is not possible, please use the high functionality product.

MEMO

Terms and Conditions Agreement

Read and understand this catalog.

Please read and understand this catalog before purchasing the products. Please consult your OMRON representative if you have any questions or comments.

Warranties.

(a) Exclusive Warranty. Omron's exclusive warranty is that the Products will be free from defects in materials and workmanship for a period of twelve months from the date of sale by Omron (or such other period expressed in writing by Omron). Omron disclaims all other warranties, express or implied.

(b) Limitations. OMRON MAKES NO WARRANTY OR REPRESENTATION, EXPRESS OR IMPLIED, ABOUT NON-INFRINGEMENT, MERCHANTABILITY OR FITNESS FOR A PARTICULAR PURPOSE OF THE PRODUCTS. BUYER ACKNOWLEDGES THAT IT ALONE HAS DETERMINED THAT THE PRODUCTS WILL SUITABLY MEET THE REQUIREMENTS OF THEIR INTENDED USE.

Omron further disclaims all warranties and responsibility of any type for claims or expenses based on infringement by the Products or otherwise of any intellectual property right. (c) Buyer Remedy. Omron's sole obligation hereunder shall be, at Omron's election, to (i) replace (in the form originally shipped with Buyer responsible for labor charges for removal or replacement thereof) the non-complying Product, (ii) repair the non-complying Product, or (iii) repay or credit Buyer an amount equal to the purchase price of the non-complying Product; provided that in no event shall Omron be responsible for warranty, repair, indemnity or any other claims or expenses regarding the Products unless Omron's analysis confirms that the Products were properly handled, stored, installed and maintained and not subject to contamination, abuse, misuse or inappropriate modification. Return of any Products by Buyer must be approved in writing by Omron before shipment. Omron Companies shall not be liable for the suitability or unsuitability or the results from the use of Products in combination with any electrical or electronic components, circuits, system assemblies or any other materials or substances or environments. Any advice, recommendations or information given orally or in writing, are not to be construed as an amendment or addition to the above warranty.

See http://www.omron.com/global/ or contact your Omron representative for published information.

Limitation on Liability; Etc.

OMRON COMPANIES SHALL NOT BE LIABLE FOR SPECIAL, INDIRECT, INCIDENTAL, OR CONSEQUENTIAL DAMAGES, LOSS OF PROFITS OR PRODUCTION OR COMMERCIAL LOSS IN ANY WAY CONNECTED WITH THE PRODUCTS, WHETHER SUCH CLAIM IS BASED IN CONTRACT, WARRANTY, NEGLIGENCE OR STRICT LIABILITY.

Further, in no event shall liability of Omron Companies exceed the individual price of the Product on which liability is asserted.

Suitability of Use.

Omron Companies shall not be responsible for conformity with any standards, codes or regulations which apply to the combination of the Product in the Buyer's application or use of the Product. At Buyer's request, Omron will provide applicable third party certification documents identifying ratings and limitations of use which apply to the Product. This information by itself is not sufficient for a complete determination of the suitability of the Product in combination with the end product, machine, system, or other application or use. Buyer shall be solely responsible for determining appropriateness of the particular Product with respect to Buyer's application, product or system. Buyer shall take application responsibility in all cases.

NEVER USE THE PRODUCT FOR AN APPLICATION INVOLVING SERIOUS RISK TO LIFE OR PROPERTY OR IN LARGE QUANTITIES WITHOUT ENSURING THAT THE SYSTEM AS A WHOLE HAS BEEN DESIGNED TO ADDRESS THE RISKS, AND THAT THE OMRON PRODUCT(S) IS PROPERLY RATED AND INSTALLED FOR THE INTENDED USE WITHIN THE OVERALL EQUIPMENT OR SYSTEM.

Programmable Products.

Omron Companies shall not be responsible for the user's programming of a programmable Product, or any consequence thereof.

Performance Data.

Data presented in Omron Company websites, catalogs and other materials is provided as a guide for the user in determining suitability and does not constitute a warranty. It may represent the result of Omron's test conditions, and the user must correlate it to actual application requirements. Actual performance is subject to the Omron's Warranty and Limitations of Liability.

Change in Specifications.

Product specifications and accessories may be changed at any time based on improvements and other reasons. It is our practice to change part numbers when published ratings or features are changed, or when significant construction changes are made. However, some specifications of the Product may be changed without any notice. When in doubt, special part numbers may be assigned to fix or establish key specifications for your application. Please consult with your Omron's representative at any time to confirm actual specifications of purchased Product.

Errors and Omissions.

Information presented by Omron Companies has been checked and is believed to be accurate; however, no responsibility is assumed for clerical, typographical or proofreading errors or omissions.