NX-series Digital I/O Unit

# NX-ID/IA/OD/OC/MD

CSM_NX-ID_IA_OD_OC_MD_DS_E_3_5

## A wide range of digital I/O units from general purpose use to high-speed synchronous control

- I/O modules on the NX CPU Unit or EtherCAT® Coupler Unit
- Connect to the NJ/NX/NY Controller via EtherCAT

## Features

- High-speed I/O refreshing using the EtherCAT coupler
- I/O refreshing synchronized with the control cycle of the controller (synchronous refreshing)
- Time-stamp inputs and outputs anywhere in the EtherCAT network can be independently controlled with sub-microsecond accuracy
- Detachable terminals for easy maintenance
- Screwless Push-In Plus terminal block or MIL/Fujitsu connector speeds up installation
- Compact with a width of 12 mm per unit (connector type: 30 mm)
- 4, 8, 16 or 32 inputs for flexible I/O configuration (NX-ID/IA)
- 2, 4, 8, 16 or 32 outputs for flexible I/O configuration (NX-OD/OC)
- Connect to the CJ PLC using the EtherNet/IP™ bus coupler

Sysmac is a trademark or registered trademark of OMRON Corporation in Japan and other countries for OMRON factory automation products.
EtherCAT® is a registered trademark and patented technology, licensed by Beckhoff Automation GmbH, Germany.
EtherNet/IP™ is a trademark of ODVA.
Other company names and product names in this document are the trademarks or registered trademarks of their respective companies.

# System Configurations

## Connected to a CPU Unit

The following figure shows a system configuration when NX Units are connected to an NX-series CPU Unit.

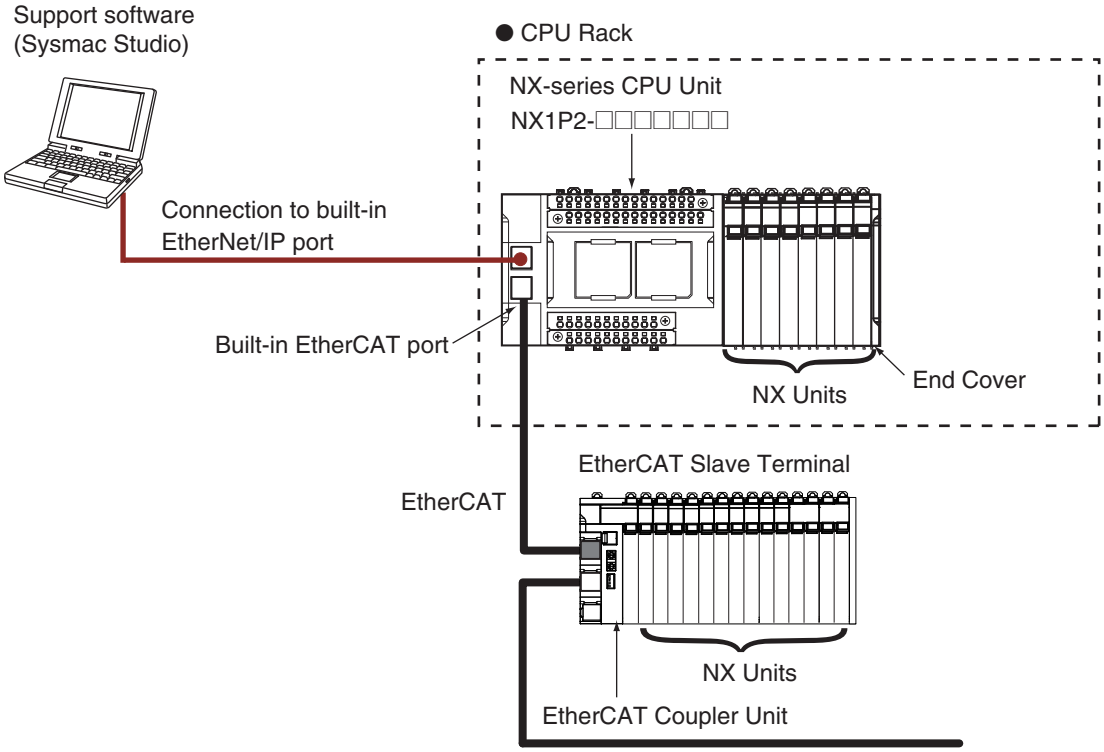


**Note:** For whether an NX Unit can be connected to the CPU Unit, refer to the version information.

## Connected to an EtherCAT Coupler Unit

The following figure shows an example of the system configuration when an EtherCAT Coupler Unit is used as a Communications Coupler Unit.

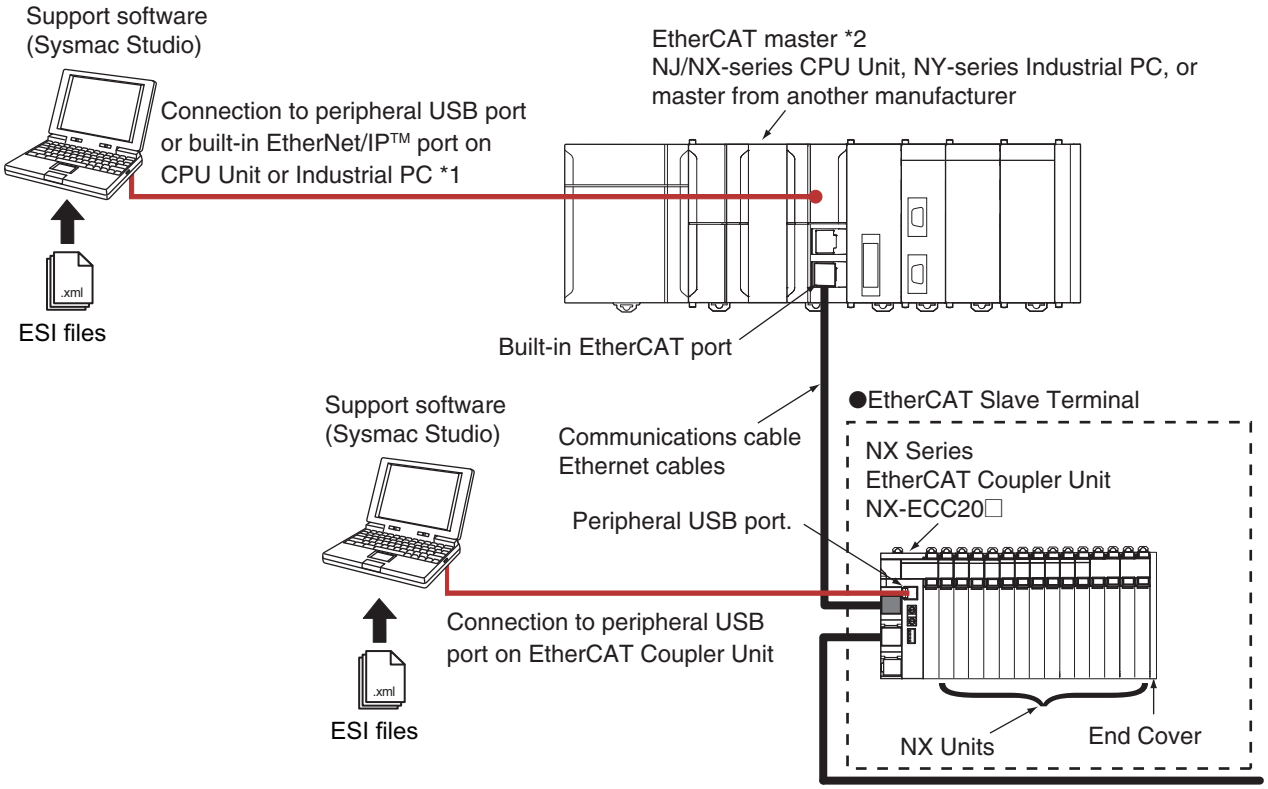


*1. The connection method for the Sysmac Studio depends on the model of the CPU Unit or Industrial PC.
*2. An EtherCAT Slave Terminal cannot be connected to any of the OMRON CJ1W-NC□81/□82 Position Control Units even though they can operate as EtherCAT masters.

**Note:** For whether an NX Unit can be connected to the Communications Coupler Unit, refer to the version information.

## System Configuration in the Case of a Communication Control Unit

The following figure shows a system configuration when a group of NX Units is connected to an NX-series Communication Control Unit. To configure a Safety Network Controller, mount the Safety CPU Unit, which is one of the NX Units, to the CPU Rack of the Communication Control Unit.
You cannot connect a Communication Control Unit with Digital I/O Units that support input refreshing with input changed time or output refreshing with specified time stamp.

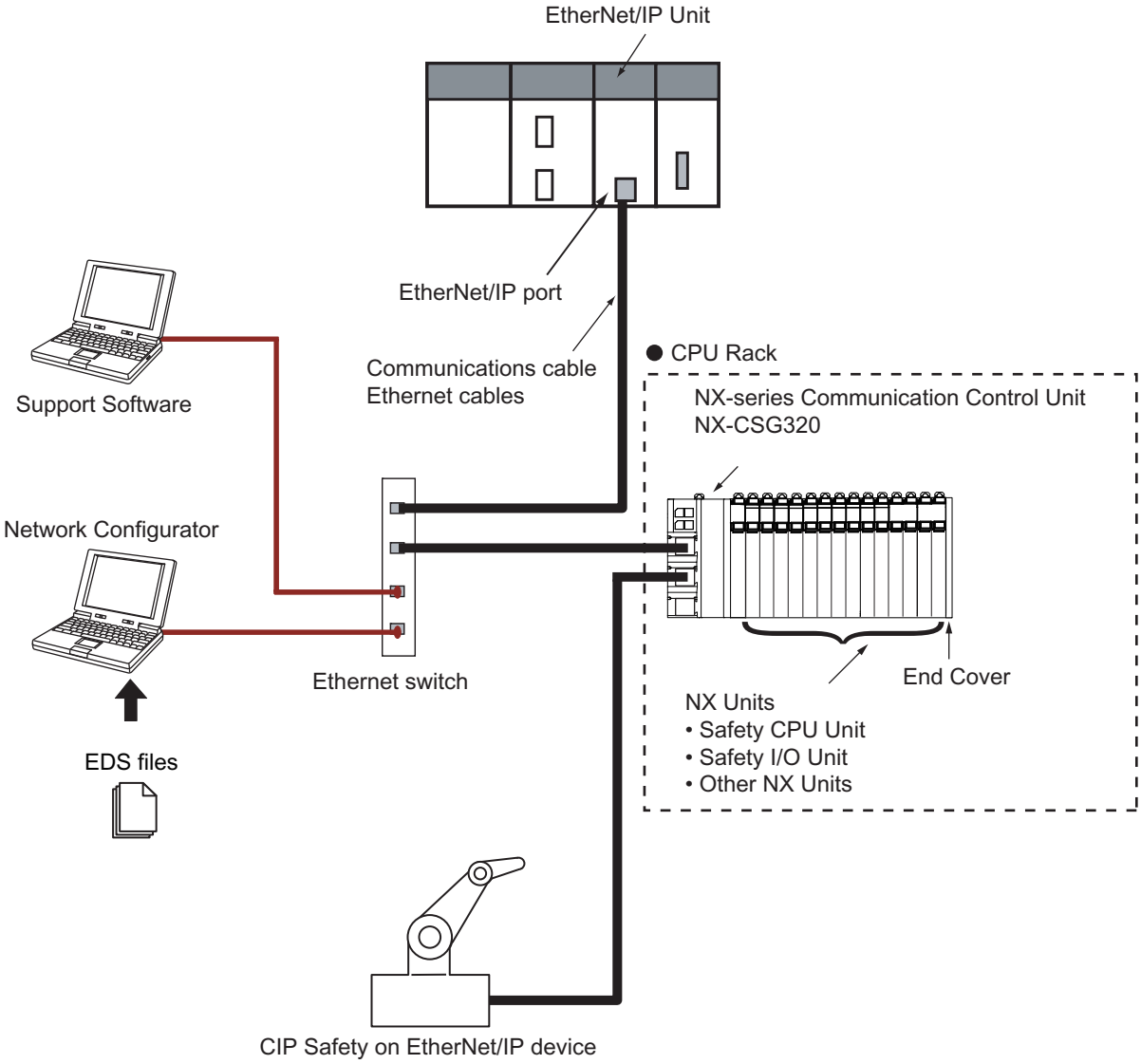


**Note:** For whether an NX Unit can be connected to the Communication Control Unit, refer to the version information.

# Model Number Structure

**NX-□□□□□□-□**
(1) (2) (3) (4) (5)

### (1) Unit type

| No. | Specification |
|---|---|
| ID | DC input |
| IA | AC input |
| OD | Transistor output |
| OC | Relay output |
| MD | DC input/Transistor output |

### (2) Number of points

| No. | Specification |
|---|---|
| 2 | 2 points |
| 3 | 4 points |
| 4 | 8 points |
| 5 | 16 points |
| 6 | 32 points, or 16 points each for inputs and outputs |

### (3) I/O type

| No. | Inputs | Outputs | Mixed I/O (Input, Output) |
|---|---|---|---|
| 1 | For both NPN/PNP | NPN | For both NPN/PNP, NPN |
| 2 | --- | PNP | For both NPN/PNP, PNP |
| 3 | NPN | --- | --- |
| 4 | PNP | --- | --- |
| 6 | --- | N.O. | --- |
| 7 | --- | N.O.+N.C. | --- |

### (5) External connection terminals

| No. | Specification |
|---|---|
| None | Screwless clamping terminal block |
| -1 | M3 screw terminal block |
| -5 | MIL connector |
| -6 | Fujitsu connector |

### (4) Other specifications
### Digital Input Units

| No. | Input voltage | ON/OFF response time | | I/O refreshing method | |
|---|---|---|---|---|---|
| | | Exceeds 1 µs | 1 µs max. | Free-Run refreshing *1 only or Switching Synchronous I/O refreshing *2 and Free-Run refreshing | Input refreshing with input changed time only |
| 17 | 12 to 24 VDC or 240 VAC | Yes | --- | Yes | --- |
| 42 | 24 VDC | Yes | --- | Yes | --- |
| 43 | | --- | Yes | Yes | --- |
| 44 | | --- | Yes | --- | Yes |

*1 Free-Run refreshing
*2 Synchronous I/O refreshing

### Digital Output Units

| No. | Rated voltage | Load current | ON/OFF response time | | I/O refreshing method | | Other functions |
|---|---|---|---|---|---|---|---|
| | | | Exceeds 1 µs | 1 µs max. | Free-Run refreshing *1 only or Switching Synchronous I/O refreshing *2 and Free-Run refreshing | Output refreshing with specified time stamp only | Load short-circuit protection |
| 21 | 12 to 24 VDC or 240 VAC | 0.5 A | Yes | --- | Yes | --- | --- |
| 33 | | 2 A | Yes | --- | Yes | --- | --- |
| 53 | 24 VDC | 0.5 A | --- | Yes | Yes | --- | --- |
| 54 | | | --- | Yes | --- | Yes | --- |
| 56 | | | Yes | --- | Yes | --- | Yes |
| 57 | | | --- | Yes | Yes | --- | Yes |
| 58 | | | --- | Yes | --- | Yes | Yes |
| 68 | | 2 A | Yes | --- | Yes | --- | Yes |

*1 Free-Run refreshing
*2 Synchronous I/O refreshing

### Digital Mixed I/O Units

| No. | Input section | Output section | | | | | |
|---|---|---|---|---|---|---|---|
| | Rated input voltage | Rated voltage | Load current | ON/OFF response time | | I/O refreshing method | Other functions |
| | | | | Exceeds 1 µs | 1 µs max. | | Load short-circuit protection |
| 21 | 24 VDC | 12 to24 VDC | 0.5 A | Yes | --- | Switching Synchronous I/O refreshing and Free-Run refreshing | Yes |
| 56 | | 24 VDC | | Yes | --- | | --- |

# Ordering Information

## Applicable standards

Refer to the OMRON website (www.ia.omron.com) or ask your OMRON representative for the most recent applicable standards for each model.

## Digital Input Units

| Product Name | Specifications | | | | | Model |
|---|---|---|---|---|---|---|
| | Number of points | Internal I/O common | Rated input voltage | I/O refreshing method | ON/OFF response time | |
| **DC Input Unit** **(Screwless Clamping Terminal Block, 12 mm Width)** | 4 points | NPN | 12 to 24 VDC | Switching Synchronous I/O refreshing and Free-Run refreshing | 20 µs max./400 µs max. | **NX-ID3317** |
| | | | 24 VDC | | 100 ns max./100 ns max. | **NX-ID3343** |
| | | | | Input refreshing with input changed time only *1 | | **NX-ID3344** |
| | | PNP | 12 to 24 VDC | Switching Synchronous I/O refreshing and Free-Run refreshing | 20 µs max./400 µs max. | **NX-ID3417** |
| | | | 24 VDC | | 100 ns max./100 ns max. | **NX-ID3443** |
| | | | | Input refreshing with input changed time only *1 | | **NX-ID3444** |
| | 8 points | NPN | | Switching Synchronous I/O refreshing and Free-Run refreshing | 20 µs max./400 µs max. | **NX-ID4342** |
| | | PNP | | | | **NX-ID4442** |
| | 16 points | NPN | | | | **NX-ID5342** |
| | | PNP | | | | **NX-ID5442** |
| **DC Input Unit** **(M3 Screw Terminal Block, 30 mm Width)** | 16 points | For both NPN/PNP | 24 VDC | Switching Synchronous I/O refreshing and Free-Run refreshing | 20 µs max./400 µs max. | **NX-ID5142-1** |
| **DC Input Unit** **(MIL Connector, 30 mm Width)** | 16 points | For both NPN/PNP | 24 VDC | Switching Synchronous I/O refreshing and Free-Run refreshing | 20 µs max./400 µs max. | **NX-ID5142-5** |
| | 32 points | | | | | **NX-ID6142-5** |
| **DC Input Unit** **(Fujitsu Connector, 30 mm Width)** | 32 points | For both NPN/PNP | 24 VDC | Switching Synchronous I/O refreshing and Free-Run refreshing | 20 µs max./400 µs max. | **NX-ID6142-6** |
| **AC Input Unit** **(Screwless Clamping Terminal Block, 12 mm Width)** | 4 points | 200 to 240 VAC, 50/60 Hz (170 to 264 VAC, ±3 Hz) | | Free-Run refreshing | 10 ms max./40 ms max. | **NX-IA3117** |

*1. To use input refreshing with input changed time, the EtherCAT Coupler Unit with unit version 1.1 or later and the Sysmac Studio version 1.07 or higher are required.

## Digital Output Units

| Product Name | Specifications | | | | | | Model |
|---|---|---|---|---|---|---|---|
| | Number of points | Internal I/O common | Maximum value of load current | Rated voltage | I/O refreshing method | ON/OFF response time | |
| **Transistor Output Unit** **(Screwless Clamping Terminal Block, 12 mm Width)** | 2 | NPN | 0.5 A/point, 1 A/Unit | 24 VDC | Output refreshing with specified time stamp only *1 | 300 ns max./ 300 ns max. | **NX-OD2154** |
| | | PNP | | | | | **NX-OD2258** |
| | 4 | NPN | 0.5 A/point, 2 A/Unit | 12 to 24 VDC | Switching Synchronous I/O refreshing and Free- Run refreshing | 0.1 ms max./ 0.8 ms max. | **NX-OD3121** |
| | | | | 24 VDC | | 300 ns max./ 300 ns max. | **NX-OD3153** |
| | | PNP | | | | 0.5 ms max./ 1.0 ms max. | **NX-OD3256** |
| | | | | | | 300 ns max./ 300 ns max. | **NX-OD3257** |
| | | | 2 A/point, 8 A/Unit | | | 0.5 ms max./ 1.0 ms max. | **NX-OD3268** |
| | 8 | NPN | 0.5 A/point, 4 A/Unit | 12 to 24 VDC | | 0.1 ms max./ 0.8 ms max. | **NX-OD4121** |
| | | PNP | | 24 VDC | | 0.5 ms max./ 1.0 ms max. | **NX-OD4256** |
| | 16 | NPN | | 12 to 24 VDC | | 0.1 ms max./ 0.8 ms max. | **NX-OD5121** |
| | | PNP | | 24 VDC | | 0.5 ms max./ 1.0 ms max. | **NX-OD5256** |
| **Transistor Output Unit** **(M3 Screw Terminal Block, 30 mm Width)** | 16 | NPN | 0.5 A/point, 5 A/Unit | 12 to 24 VDC | Switching Synchronous I/O refreshing and Free- Run refreshing | 0.1 ms max./ 0.8 ms max. | **NX-OD5121-1** |
| | | PNP | | 24 VDC | | 0.5 ms max./ 1.0 ms max. | **NX-OD5256-1** |
| **Transistor Output Unit** **(MIL Connector, 30 mm Width)** | 16 | NPN | 0.5 A/point, 2 A/Unit | 12 to 24 VDC | Switching Synchronous I/O refreshing and Free- Run refreshing | 0.1 ms max./ 0.8 ms max. | **NX-OD5121-5** |
| | | PNP | | 24 VDC | | 0.5 ms max./ 1.0 ms max. | **NX-OD5256-5** |
| | 32 | NPN | 0.5 A/point, 2 A/ common, 4 A/Unit | 12 to 24 VDC | | 0.1 ms max./ 0.8 ms max. | **NX-OD6121-5** |
| | | PNP | | 24 VDC | | 0.5 ms max./ 1.0 ms max. | **NX-OD6256-5** |
| **Transistor Output Unit** **(Fujitsu Connector, 30 mm Width)** | 32 | NPN | 0.5 A/point, 2 A/ common, 4 A/Unit | 12 to 24 VDC | Switching Synchronous I/O refreshing and Free- Run refreshing | 0.1 ms max./ 0.8 ms max. | **NX-OD6121-6** |
| **Relay Output Unit** **(Screwless Clamping Terminal Block, 12 mm Width/24 mm Width)** | 2 | Relay type: N.O. | 250 VAC/2 A (cosϕ=1), 250 VAC/ 2 A (cosϕ=0.4), 24 VDC/2 A, 4 A/Unit | | Free-Run refreshing | 15 ms max./ 15 ms max. | **NX-OC2633** |
| | | Relay type: N.O.+N.C. | | | | | **NX-OC2733** |
| | 8 | Relay type: N.O. | 250 VAC/2 A (cosϕ=1), 250 VAC/ 2 A (cosϕ=0.4), 24 VDC/2 A, 8 A/Unit | | Free-Run refreshing | 15 ms max./ 15 ms max. | **NX-OC4633** |

*1. To use input refreshing with input changed time, the EtherCAT Coupler Unit with unit version 1.1 or later and the Sysmac Studio version 1.07 or higher are required.

## Digital Mixed I/O Units

| Product Name | Specifications | | | | | Model |
|---|---|---|---|---|---|---|
| | Number of points | Internal I/O common | Maximum value of load current | I/O refreshing method | ON/OFF response time | |
| **DC Input/Transistor Output Unit** **(MIL Connector, 30 mm Width)** | Outputs: 16 points<br>Inputs: 16 points | Outputs: NPN<br>Inputs: For both NPN/PNP | Outputs: 12 to 24 VDC<br>Inputs: 24 VDC | Switching Synchronous I/O refreshing and Free-Run refreshing | Outputs: 0.1 ms max./ 0.8 ms max.<br>Inputs: 20 µs max./ 400 µs max. | **NX-MD6121-5** |
| | | Outputs: PNP<br>Inputs: For both NPN/PNP | Outputs: 24 VDC<br>Inputs: 24 VDC | | Outputs: 0.5 ms max./ 1.0 ms max.<br>Inputs: 20 µs max./ 400 µs max. | **NX-MD6256-5** |
| **DC Input/Transistor Output Unit** **(Fujitsu Connector, 30 mm Width)** | Outputs: 16 points<br>Inputs: 16 points | Outputs: NPN<br>Inputs: For both NPN/PNP | Outputs: 12 to 24 VDC<br>Inputs: 24 VDC | Switching Synchronous I/O refreshing and Free-Run refreshing | Outputs: 0.1 ms max./ 0.8 ms max.<br>Inputs: 20 µs max./ 400 µs max. | **NX-MD6121-6** |

## Optional Products

| Product name | Specification | Model | Standards |
|---|---|---|---|
| **Unit/Terminal Block Coding Pins** | For 10 Units<br>(Terminal Block: 30 pins, Unit: 30 pins) | **NX-AUX02** | --- |

| Product name | Specification | | | | Model | Standards |
|---|---|---|---|---|---|---|
| | No. of terminals | Terminal number indications | Ground terminal mark | Terminal current capacity | | |
| **Terminal Block** | 8 | A/B | None | 10 A | **NX-TBA082** | --- |
| | 12 | | | | **NX-TBA122** | |
| | 16 | | | | **NX-TBA162** | |

## Accessories

Not included.

## Connection Patterns for Connector-Terminal Block Conversion Units

| Pattern | Configuration | Number of connectors | Branching |
|---|---|---|---|
| A | 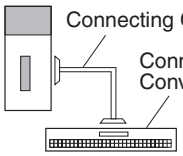  | 1 | None |
| B | 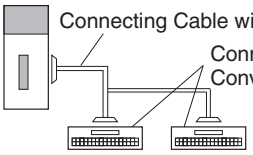  | | 2 branches |
| C | 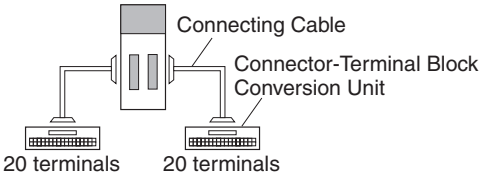  | 2 | None |

## Connections to Connector-Terminal Block Conversion Units

| Unit | I/O capacity | Number of connectors | Polarity | Connection pattern | Connecting Cable *1 | Connector-Terminal Block Conversion Unit | Wiring method | Common terminal |
|---|---|---|---|---|---|---|---|---|
| NX-ID5142-5 | 16 inputs | 1 MIL connector | NPN/ PNP | A | XW2Z-□□□X | XW2R-□20GD-T | Depends on model *3 | None |
| | | | | | XW2Z-□□□X | XW2D-20G6 | Phillips screw | None |
| NX-ID6142-5 | 32 inputs | 1 MIL connector | NPN/ PNP | A | XW2Z-□□□PM | XW2R-□34GD-C2 | Depends on model *3 | None |
| | | | | A | XW2Z-□□□K | XW2D-40G6 | Phillips screw | None |
| | | | | B | XW2Z-□□□N | XW2R-□20GD-T (2 Units) | Depends on model *3 | None |
| | | | | B | XW2Z-□□□N | XW2C-20G5-IN16 (2 Units) *2 | Phillips screw | Yes |
| | | | | B | XW2Z-□□□N | XW2C-20G6-IO16 (2 Units) | Phillips screw | Yes |
| | | | | B | XW2Z-□□□N | XW2D-20G6 (2 Units) | Phillips screw | None |
| | | | | B | XW2Z-□□□N | XW2E-20G5-IN16 (2 Units) *2 | Phillips screw | Yes |
| NX-ID6142-6 | 32 inputs | 1 Fujitsu connector | NPN/ PNP | A | XW2Z-□□□PF | XW2R-□34GD-C1 | Depends on model *3 | None |
| | | | | A | XW2Z-□□□B | XW2D-40G6 | Phillips screw | None |
| | | | | B | XW2Z-□□□D | XW2R-□20GD-T (2 Units) | Depends on model *3 | None |
| | | | | B | XW2Z-□□□D | XW2C-20G5-IN16 (2 Units) *2 | Phillips screw | Yes |
| | | | | B | XW2Z-□□□D | XW2C-20G6-IO16 (2 Units) | Phillips screw | Yes |
| | | | | B | XW2Z-□□□D | XW2D-20G6 (2 Units) | Phillips screw | None |
| | | | | B | XW2Z-□□□D | XW2E-20G5-IN16 (2 Units) *2 | Phillips screw | Yes |
| NX-OD5121-5 | 16 outputs | 1 MIL connector | NPN | A | XW2Z-□□□X | XW2R-□20GD-T | Depends on model *3 | None |
| | | | | A | XW2Z-□□□X | XW2D-20G6 | Phillips screw | None |
| NX-OD5256-5 | 16 outputs | 1 MIL connector | PNP | A | XW2Z-□□□X | XW2R-□20GD-T | Depends on model *3 | None |
| | | | | A | XW2Z-□□□X | XW2D-20G6 | Phillips screw | None |

| Unit | I/O capacity | Number of connectors | Polarity | Connection pattern | Connecting Cable *1 | Connector-Terminal Block Conversion Unit | Wiring method | Common terminal |
|---|---|---|---|---|---|---|---|---|
| NX-OD6121-5 | 32 inputs | 1 MIL connector | NPN | A | XW2Z-□□□PM | XW2R-□34GD-C4 | Depends on model *3 | None |
| | | | | A | XW2Z-□□□K | XW2D-40G6 | Phillips screw | None |
| | | | | B | XW2Z-□□□N | XW2R-□20GD-T (2 Units) | Depends on model *3 | None |
| | | | | B | XW2Z-□□□N | XW2C-20G6-IO16 (2 Units) | Phillips screw | Yes |
| | | | | B | XW2Z-□□□N | XW2D-20G6 (2 Units) | Phillips screw | None |
| NX-OD6121-6 | 32 inputs | 1 Fujitsu connector | NPN | A | XW2Z-□□□PF | XW2R-□34GD-C3 | Depends on model *3 | None |
| | | | | A | XW2Z-□□□B | XW2D-40G6 | Phillips screw | None |
| | | | | B | XW2Z-□□□L | XW2R-□20GD-T (2 Units) | Depends on model *3 | None |
| | | | | B | XW2Z-□□□L | XW2C-20G6-IO16 (2 Units) | Phillips screw | Yes |
| | | | | B | XW2Z-□□□L | XW2D-20G6 (2 Units) | Phillips screw | None |
| NX-OD6256-5 | 32 inputs | 1 MIL connector | PNP | A | XW2Z-□□□PM | XW2R-□34GD-C4 | Depends on model *3 | None |
| | | | | A | XW2Z-□□□K | XW2D-40G6 | Phillips screw | None |
| | | | | B | XW2Z-□□□N | XW2R-□20GD-T (2 Units) | Depends on model *3 | None |
| | | | | B | XW2Z-□□□N | XW2C-20G6-IO16 (2 Units) | Phillips screw | Yes |
| | | | | B | XW2Z-□□□N | XW2D-20G6 (2 Units) | Phillips screw | None |
| NX-MD6121-5 | 16 outputs | 1 MIL connector | NPN/ PNP | C | XW2Z-□□□X | XW2R-□20GD-T | Depends on model *3 | None |
| | | | | C | XW2Z-□□□X | XW2D-20G6 | Phillips screw | None |
| | 16 outputs | 1 MIL connector | NPN | C | XW2Z-□□□X | XW2R-□20GD-T | Depends on model *3 | None |
| | | | | C | XW2Z-□□□X | XW2D-20G6 | Phillips screw | None |
| NX-MD6121-6 | 16 outputs | 1 Fujitsu connector | NPN/ PNP | C | XW2Z-□□□A | XW2R-□20GD-T | Depends on model *3 | None |
| | | | | C | XW2Z-□□□A | XW2C-20G5-IN16 *2 | Phillips screw | Yes |
| | | | | C | XW2Z-□□□A | XW2C-20G6-IO16 | Phillips screw | Yes |
| | | | | C | XW2Z-□□□A | XW2D-20G6 | Phillips screw | None |
| | | | | C | XW2Z-□□□A | XW2E-20G5-IN16 *2 | Phillips screw | Yes |
| | 16 outputs | 1 Fujitsu connector | NPN | C | XW2Z-□□□A | XW2R-□20GD-T | Depends on model *3 | None |
| | | | | C | XW2Z-□□□A | XW2C-20G6-IO16 | Phillips screw | Yes |
| | | | | C | XW2Z-□□□A | XW2D-20G6 | Phillips screw | None |
| NX-MD6256-5 | 16 outputs | 1 MIL connector | NPN/ PNP | C | XW2Z-□□□X | XW2R-□20GD-T | Depends on model *3 | None |
| | | | | C | XW2Z-□□□X | XW2D-20G6 | Phillips screw | None |
| | 16 outputs | 1 MIL connector | PNP | C | XW2Z-□□□X | XW2R-□20GD-T | Depends on model *3 | None |
| | | | | C | XW2Z-□□□X | XW2D-20G6 | Phillips screw | None |

**Note:** For other models and specifications that are not listed above, refer to the *XW2R Series Connector-Terminal Block Conversion Units Catalog* (Cat. No. G077) and *XW2R Datasheets*.

**✻1** □□□ in the model number indicates the cable length. Refer to the *XW2Z Datasheet* for details.

**✻2** The inputs are NPN. For PNP inputs, reverse the polarity of the external power supply connections to the power supply terminals on the Connector-Terminal Block Conversion Unit.

**✻3** The wiring methods vary depending on the Connector-Terminal Block Conversion Unit. □ in the model number indicates the wiring method.
J = Phillips screw
E = Slotted screw (rise up)
P= Push-in spring

## Connection Patterns for I/O Relay Terminals

| Pattern | Configuration | Number of connectors | Branching |
|---|---|---|---|
| A | 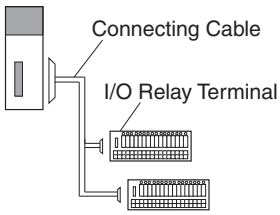 | 1 | 2 branches |
| E | 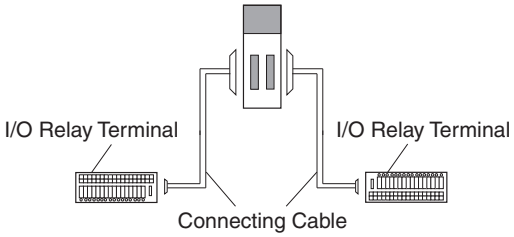 | 2 | None |
| F | 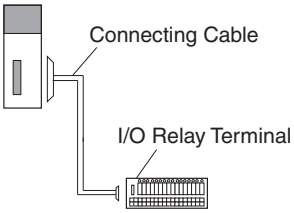 | 1 | |

## Connections to I/O Relay Terminals

| Unit | I/O capacity | Number of connectors | Polarity | Connection pattern | Number of branches | Connecting Cable *1 | I/O Relay Terminal | Wiring method |
|---|---|---|---|---|---|---|---|---|
| NX-ID5142-5 | 16 inputs | 1 MIL connector | NPN | F | None | XW2Z-RO□C | G7TC-ID16 | Phillips screw |
| | | | | F | None | XW2Z-RO□C | G7TC-IA16 | Phillips screw |
| | | | | F | None | XW2Z-RO□C | G70V-SID16P | Push-in spring |
| | | | | F | None | XW2Z-RO□C | G70V-SID16P-C16 | Push-in spring |
| | | | PNP | F | None | XW2Z-RO□C | G70V-SID16P-1 | Push-in spring |
| | | | | F | None | XW2Z-RO□C | G70V-SID16P-1-C16 | Push-in spring |
| NX-ID6142-5 | 32 inputs | 1 MIL connector | NPN | A | 2 | XW2Z-RO□-□-D1 | G7TC-ID16 | Phillips screw |
| | | | | A | 2 | XW2Z-RO□-□-D1 | G7TC-IA16 | Phillips screw |
| | | | | A | 2 | XW2Z-RO□-□-D1 | G70V-SID16P | Push-in spring |
| | | | | A | 2 | XW2Z-RO□-□-D1 | G70V-SID16P-C16 | Push-in spring |
| | | | PNP | A | 2 | XW2Z-RO□-□-D1 | G70V-SID16P-1 | Push-in spring |
| | | | | A | 2 | XW2Z-RO□-□-D1 | G70V-SID16P-1-C16 | Push-in spring |
| NX-ID6142-6 | 32 inputs | 1 Fujitsu connector | NPN | A | 2 | XW2Z-RI□C-□ | G7TC-ID16 | Phillips screw |
| | | | | A | 2 | XW2Z-RI□C-□ | G7TC-IA16 | Phillips screw |
| | | | | A | 2 | XW2Z-RI□C-□ | G70V-SID16P | Push-in spring |
| | | | | A | 2 | XW2Z-RI□C-□ | G70V-SID16P-C16 | Push-in spring |
| | | | PNP | A | 2 | XW2Z-RI□C-□ | G70V-SID16P-1 | Push-in spring |
| | | | | A | 2 | XW2Z-RI□C-□ | G70V-SID16P-1-C16 | Push-in spring |
| NX-OD5121-5 | 16 outputs | 1 MIL connector | NPN | F | None | XW2Z-RO□C | G7TC-OC08 | Phillips screw |
| | | | | F | None | XW2Z-RO□C | G70D-SOC08 | Phillips screw |
| | | | | F | None | XW2Z-RO□C | G70R-SOC08 *2 | Phillips screw |
| | | | | F | None | XW2Z-RO□C | G7TC-OC16 | Phillips screw |
| | | | | F | None | XW2Z-RO□C | G70D-SOC16 | Phillips screw |
| | | | | F | None | XW2Z-RO□C | G70D-VSOC16 | Phillips screw |
| | | | | F | None | XW2Z-RO□C | G70D-FOM16 | Phillips screw |
| | | | | F | None | XW2Z-RO□C | G70D-VFOM16 | Phillips screw |
| | | | | F | None | XW2Z-RO□C | G70A-ZOC16-3 | Phillips screw |
| | | | | F | None | XW2Z-RO□C | G70V-SOC16P | Push-in spring |
| | | | | F | None | XW2Z-RO□C | G70V-SOC16P-C4 | Push-in spring |

| Unit | I/O capacity | Number of connectors | Polarity | Connection pattern | Number of branches | Connecting Cable *1 | I/O Relay Terminal | Wiring method |
|---|---|---|---|---|---|---|---|---|
| NX-OD5256-5 | 16 outputs | 1 MIL connector | PNP | F | None | XW2Z-RI□C | G7TC-OC16-1 | Phillips screw |
| | | | | F | None | XW2Z-RO□C | G70D-SOC16-1 | Phillips screw |
| | | | | F | None | XW2Z-RO□C | G70D-FOM16-1 | Phillips screw |
| | | | | F | None | XW2Z-RO□C | G70A-ZOC16-4 | Phillips screw |
| | | | | F | None | XW2Z-RO□C | G70V-SOC16P-1 | Push-in spring |
| | | | | F | None | XW2Z-RO□C | G70V-SOC16P-1-C4 | Push-in spring |
| NX-OD6121-5 | 32 outputs | 1 MIL connector | NPN | A | 2 | XW2Z-RO□-□-D1 | G7TC-OC16 | Phillips screw |
| | | | | A | 2 | XW2Z-RO□-□-D1 | G7TC-OC08 | Phillips screw |
| | | | | A | 2 | XW2Z-RO□-□-D1 | G70D-SOC16 | Phillips screw |
| | | | | A | 2 | XW2Z-RO□-□-D1 | G70D-FOM16 | Phillips screw |
| | | | | A | 2 | XW2Z-RO□-□-D1 | G70D-VSOC16 | Phillips screw |
| | | | | A | 2 | XW2Z-RO□-□-D1 | G70D-VFOM16 | Phillips screw |
| | | | | A | 2 | XW2Z-RO□-□-D1 | G70A-ZOC16-3 and Relay | Phillips screw |
| | | | | A | 2 | XW2Z-RO□-□-D1 | G70R-SOC08 *2 | Phillips screw |
| | | | | A | 2 | XW2Z-RO□-□-D1 | G70D-SOC08 | Phillips screw |
| | | | | A | 2 | XW2Z-RO□-□-D1 | G70V-SOC16P | Push-in spring |
| | | | | A | 2 | XW2Z-RO□-□-D1 | G70V-SOC16P-C4 | Push-in spring |
| NX-OD6121-6 | 32 outputs | 1 Fujitsu connector | NPN | A | 2 | XW2Z-RO□C-□ | G7TC-OC16 | Phillips screw |
| | | | | A | 2 | XW2Z-RO□C-□ | G7TC-OC08 | Phillips screw |
| | | | | A | 2 | XW2Z-RO□C-□ | G70D-SOC16 | Phillips screw |
| | | | | A | 2 | XW2Z-RO□C-□ | G70D-FOM16 | Phillips screw |
| | | | | A | 2 | XW2Z-RO□C-□ | G70D-VSOC16 | Phillips screw |
| | | | | A | 2 | XW2Z-RO□C-□ | G70D-VFOM16 | Phillips screw |
| | | | | A | 2 | XW2Z-RO□C-□ | G70A-ZOC16-3 and Relay | Phillips screw |
| | | | | A | 2 | XW2Z-RO□C-□ | G70R-SOC08 *2 | Phillips screw |
| | | | | A | 2 | XW2Z-RO□C-□ | G70D-SOC08 | Phillips screw |
| | | | | A | 2 | XW2Z-RO□C-□ | G70V-SOC16P | Push-in spring |
| | | | | A | 2 | XW2Z-RO□C-□ | G70V-SOC16P-C4 | Push-in spring |
| NX-OD6256-5 | 32 outputs | 1 MIL connector | PNP | A | 2 | XW2Z-RI□-□-D1 | G7TC-OC16-1 | Phillips screw |
| | | | | A | 2 | XW2Z-RO□-□-D1 | G70D-SOC16-1 | Phillips screw |
| | | | | A | 2 | XW2Z-RO□-□-D1 | G70D-FOM16-1 | Phillips screw |
| | | | | A | 2 | XW2Z-RO□-□-D1 | G70A-ZOC16-4 and Relay | Phillips screw |
| NX-MD6121-5 | 16 inputs | 1 MIL connector | NPN | E | None | XW2Z-RO□C | G7TC-ID16 | Phillips screw |
| | | | | E | None | XW2Z-RO□C | G7TC-IA16 | Phillips screw |
| | | | | E | None | XW2Z-RO□C | G70V-SID16P | Push-in spring |
| | | | | E | None | XW2Z-RO□C | G70V-SID16P-C16 | Push-in spring |
| | 16 outputs | 1 MIL connector | NPN | E | None | XW2Z-RO□C | G7TC-OC16 | Phillips screw |
| | | | | E | None | XW2Z-RO□C | G7TC-OC08 | Phillips screw |
| | | | | E | None | XW2Z-RO□C | G70D-SOC16 | Phillips screw |
| | | | | E | None | XW2Z-RO□C | G70D-FOM16 | Phillips screw |
| | | | | E | None | XW2Z-RO□C | G70D-VSOC16 | Phillips screw |
| | | | | E | None | XW2Z-RO□C | G70D-VFOM16 | Phillips screw |
| | | | | E | None | XW2Z-RO□C | G70A-ZOC16-3 and Relay | Phillips screw |
| | | | | E | None | XW2Z-RO□C | G70R-SOC08 *2 | Phillips screw |
| | | | | E | None | XW2Z-RO□C | G70D-SOC08 | Phillips screw |
| | | | | E | None | XW2Z-RO□C | G70V-SOC16P | Push-in spring |
| | | | | E | None | XW2Z-RO□C | G70V-SOC16P-C4 | Push-in spring |

| Unit | I/O capacity | Number of connectors | Polarity | Connection pattern | Number of branches | Connecting Cable *1 | I/O Relay Terminal | Wiring method |
|---|---|---|---|---|---|---|---|---|
| NX-MD6121-6 | 16 inputs | 1 Fujitsu connector | NPN | E | None | XW2Z-R□C | G7TC-ID16 | Phillips screw |
| | | | | E | None | XW2Z-R□C | G7TC-IA16 | Phillips screw |
| | | | | E | None | XW2Z-R□C | G70V-SID16P | Push-in spring |
| | | | | E | None | XW2Z-R□C | G70V-SID16P-C16 | Push-in spring |
| | 16 outputs | 1 Fujitsu connector | NPN | E | None | XW2Z-R□C | G7TC-OC16 | Phillips screw |
| | | | | E | None | XW2Z-R□C | G7TC-OC08 | Phillips screw |
| | | | | E | None | XW2Z-R□C | G70D-SOC16 | Phillips screw |
| | | | | E | None | XW2Z-R□C | G70D-FOM16 | Phillips screw |
| | | | | E | None | XW2Z-R□C | G70D-VSOC16 | Phillips screw |
| | | | | E | None | XW2Z-R□C | G70D-VFOM16 | Phillips screw |
| | | | | E | None | XW2Z-R□C | G70A-ZOC16-3 and Relay | Phillips screw |
| | | | | E | None | XW2Z-R□C | G70R-SOC08 *2 | Phillips screw |
| | | | | E | None | XW2Z-R□C | G70D-SOC08 | Phillips screw |
| | | | | E | None | XW2Z-R□C | G70V-SOC16P | Push-in spring |
| | | | | E | None | XW2Z-R□C | G70V-SOC16P-C4 | Push-in spring |
| NX-MD6256-5 | 16 inputs | 1 MIL connector | PNP | E | None | XW2Z-RO□C | G70V-SID16P-1 | Push-in spring |
| | | | | E | None | XW2Z-RO□C | G70V-SID16P-1-C16 | Push-in spring |
| | 16 outputs | 1 MIL connector | PNP | E | None | XW2Z-RO□C | G7TC-OC16-1 | Phillips screw |
| | | | | E | None | XW2Z-RI□C | G70D-SOC16-1 | Phillips screw |
| | | | | E | None | XW2Z-RI□C | G70D-FOM16-1 | Phillips screw |
| | | | | E | None | XW2Z-RI□C | G70A-ZOC16-4 and Relay | Phillips screw |
| | | | | E | None | XW2Z-RI□C | G70V-SOC16P-1 | Push-in spring |
| | | | | E | None | XW2Z-RI□C | G70V-SOC16P-1-C4 | Push-in spring |

**Note: 1.** For other models and specifications that are not listed above, refer to the datasheets.
**2.** The G70V Series includes models that provide internal connections. Refer to the *G70V Datasheet* (Cat. No. J215) for details.
**3.** The G70A is a socket only. Mountable relays and timers are sold separately.
*1. □ in the model number indicates the cable length. Refer to the *XW2Z-R Datasheet* (Cat. No. G126) for details.
*2. Product no longer available to order.

## General Specifications

| Item | | Specification |
|---|---|---|
| **Enclosure** | | Mounted in a panel |
| **Grounding method** | | Ground to 100 Ω or less |
| **Operating environment** | **Ambient operating temperature** | 0 to 55°C |
| | **Ambient operating humidity** | 10% to 95% (with no condensation or icing) |
| | **Atmosphere** | Must be free from corrosive gases. |
| | **Ambient storage temperature** | −25 to 70°C (with no condensation or icing) |
| | **Altitude** | 2,000 m max. |
| | **Pollution degree** | 2 or less: Meets IEC 61010-2-201. |
| | **Noise immunity** | 2 kV on power supply line (Conforms to IEC61000-4-4.) |
| | **Overvoltage category** | Category II: Meets IEC 61010-2-201. |
| | **EMC immunity level** | Zone B |
| | **Vibration resistance *1** | Conforms to IEC 60068-2-6.<br>5 to 8.4 Hz with 3.5-mm amplitude, 8.4 to 150 Hz, acceleration of 9.8 $m/s^2$, 100 min each in X, Y, and Z directions<br>(10 sweeps of 10 min each = 100 min total) |
| | **Shock resistance *1** | Conforms to IEC 60068-2-27. 147 $m/s^2$, 3 times each in X, Y, and Z directions |
| **Applicable standards *2** | | cULus: Listed (UL508) or Listed (UL 61010-2-201), ANSI/ISA 12.12.01,<br>EU: EN 61131-2 or EN 61010-2-201, C-Tick or RCM, KC: KC Registration, NK, LR |

*1. For the Relay Output Unit, refer to the Digital Input Unit Specifications.
*2. Refer to the OMRON website (http://www.ia.omron.com/) or consult your OMRON representative for the most recent applicable standards for each model.

# Digital Input Unit Specifications

## ● DC Input Unit (Screwless Clamping Terminal Block, 12 mm Width)

## NX-ID3317

| | | | |
|---|---|---|---|
| **Unit name** | DC Input Unit | **Model** | NX-ID3317 |
| **Number of points** | 4 points | **External connection terminals** | Screwless clamping terminal block (12 terminals) |
| **I/O refreshing method** | Selectable Synchronous I/O refreshing or Free-Run refreshing | | |
| **Indicators** | TS indicator, input indicator<br> <br> | **Internal I/O common** | NPN |
| | | **Rated input voltage** | 12 to 24 VDC (9 to 28.8 VDC) |
| | | **Input current** | 6 mA typical (at 24 VDC), rated current |
| | | **ON voltage/ON current** | 9 VDC min./3 mA min. (between IOV and each signal) |
| | | **OFF voltage/OFF current** | 2 VDC max./1 mA max. (between IOV and each signal) |
| | | **ON/OFF response time** | 20 µs max./400 µs max. |
| | | **Input filter time** | Without filter, 0.25 ms, 0.5 ms, 1 ms (factory setting), 2 ms, 4 ms, 8 ms, 16 ms, 32 ms, 64 ms, 128 ms, 256 ms |
| **Dimensions** | 12 (W) x 100 (H) x 71 (D) | **Isolation method** | Photocoupler isolation |
| **Insulation resistance** | 20 MΩ min. between isolated circuits (at 100 VDC) | **Dielectric strength** | 510 VAC between isolated circuits for 1 minute at a leakage current of 5 mA max. |
| **I/O power supply method** | Supply from the NX bus | **Current capacity of I/O power supply terminal** | IOV: 0.1 A/terminal max.,<br>IOG: 0.1 A/terminal max. |
| **NX Unit power consumption** | • Connected to a CPU Unit or Communication Control Unit 0.90 W max.<br>• Connected to a Communications Coupler Unit 0.50 W max. | **Current consumption from I/O power supply** | No consumption |
| **Weight** | 65 g max. | | |
| **Circuit layout** | 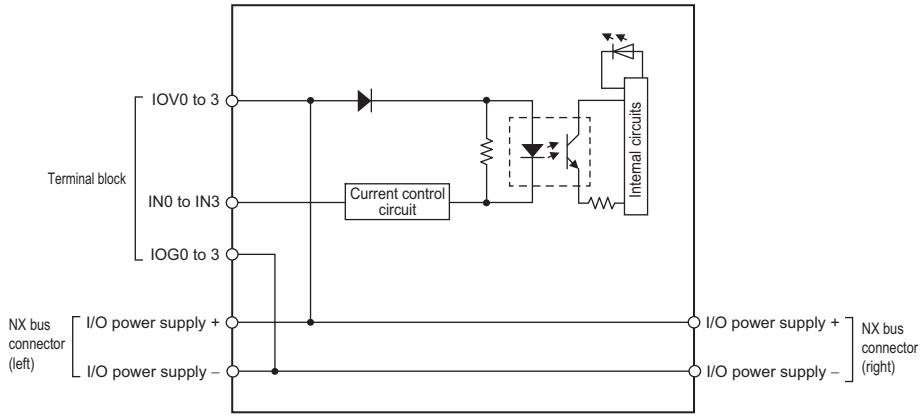 <br> | | |
| **Installation orientation and restrictions** | Installation orientation:<br>• Connected to a CPU Unit or Communication Control Unit: Possible in upright installation.<br>• Connected to a Communications Coupler Unit: Possible in 6 orientations.<br>Restrictions: No restrictions | | |
| **Terminal connection diagram** | 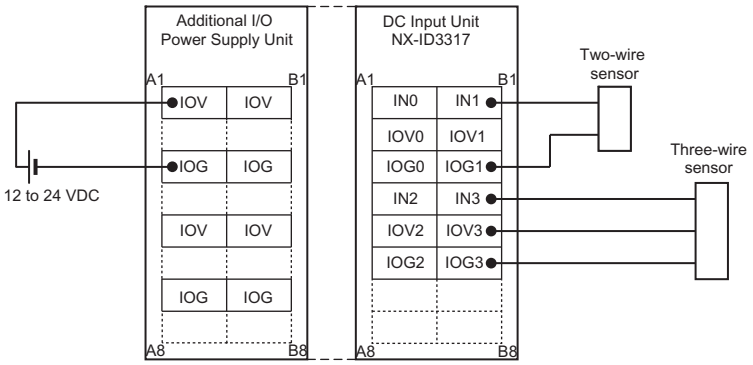 <br> | | |
| **Disconnection/ Short-circuit detection** | Not supported. | **Protective function** | Not supported. |

## NX-ID3343

| | | | |
|---|---|---|---|
| **Unit name** | DC Input Unit | **Model** | NX-ID3343 |
| **Number of points** | 4 points | **External connection terminals** | Screwless clamping terminal block (12 terminals) |
| **I/O refreshing method** | Selectable Synchronous I/O refreshing or Free-Run refreshing | | |
| **Indicators** | TS indicator, input indicator<br> <br> | **Internal I/O common** | NPN |
| | | **Rated input voltage** | 24 VDC (15 to 28.8 VDC) |
| | | **Input current** | 3.5 mA typical (at 24 VDC), rated current |
| | | **ON voltage/ON current** | 15 VDC min./3 mA min. (between IOV and each signal) |
| | | **OFF voltage/OFF current** | 5 VDC max./1 mA max. (between IOV and each signal) |
| | | **ON/OFF response time** | 100 ns max./100 ns max. |
| | | **Input filter time** | Without filter, 1 µs, 2 µs, 4 µs, 8 µs (factory setting), 16 µs, 32 µs, 64 µs, 128 µs, 256 µs |
| **Dimensions** | 12 (W) x 100 (H) x 71 (D) | **Isolation method** | Digital isolator isolation |
| **Insulation resistance** | 20 MΩ min. between isolated circuits (at 100 VDC) | **Dielectric strength** | 510 VAC between isolated circuits for 1 minute at a leakage current of 5 mA max. |
| **I/O power supply method** | Supply from the NX bus | **Current capacity of I/O power supply terminal** | IOV: 0.1 A/terminal max.,<br>IOG: 0.1 A/terminal max. |
| **NX Unit power consumption** | • Connected to a CPU Unit or Communication Control Unit<br>0.90 W max.<br>• Connected to a Communications Coupler Unit<br>0.55 W max. | **Current consumption from I/O power supply** | 30 mA max. |
| **Weight** | 65 g max. | | |
| **Circuit layout** | 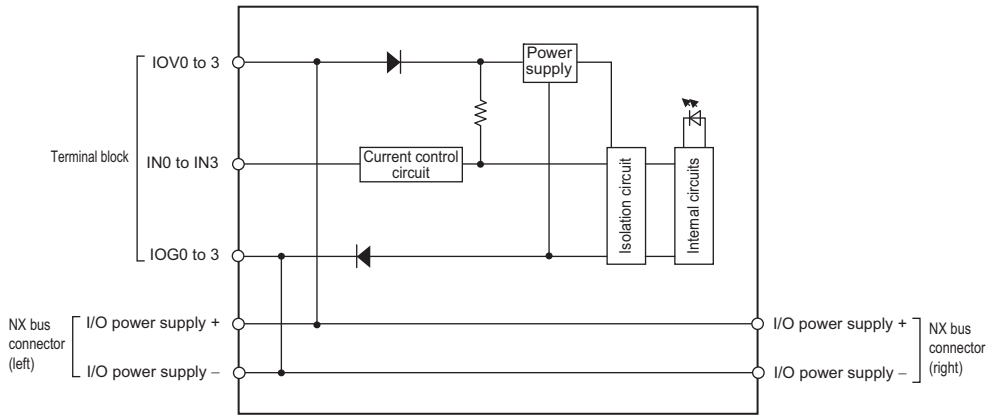 <br> | | |
| **Installation orientation and restrictions** | Installation orientation:<br>• Connected to a CPU Unit or Communication Control Unit: Possible in upright installation.<br>• Connected to a Communications Coupler Unit: Possible in 6 orientations.<br>Restrictions: No restrictions | | |
| **Terminal connection diagram** | 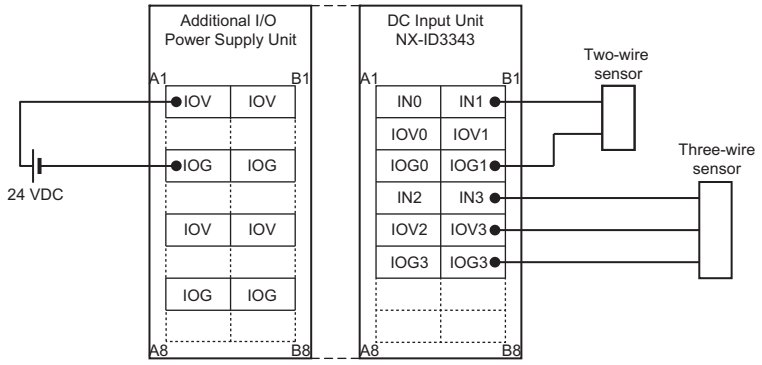 <br> | | |
| **Disconnection/ Short-circuit detection** | Not supported. | **Protective function** | Not supported. |

## NX-ID3344

| | | | |
|---|---|---|---|
| **Unit name** | DC Input Unit | **Model** | NX-ID3344 |
| **Number of points** | 4 points | **External connection terminals** | Screwless clamping terminal block (12 terminals) |
| **I/O refreshing method** | Input refreshing with input changed time | | |
| **Indicators** | TS indicator, input indicators<br> <br> | **Internal I/O common** | NPN |
| | | **Rated input voltage** | 24 VDC (15 to 28.8 VDC) |
| | | **Input current** | 3.5 mA typical (at 24 VDC), rated current |
| | | **ON voltage/ON current** | 15 VDC min./3 mA min. (between IOV and each signal) |
| | | **OFF voltage/OFF current** | 5 VDC max./1 mA max. (between IOV and each signal) |
| | | **ON/OFF response time** | 100 ns max./100 ns max. |
| | | **Input filter time** | No filter * |
| **Dimensions** | 12 (W) x 100 (H) x 71 (D) | **Isolation method** | Digital isolator isolation |
| **Insulation resistance** | 20 MΩ min. between isolated circuits (at 100 VDC) | **Dielectric strength** | 510 VAC between isolated circuits for 1 minute at a leakage current of 5 mA max. |
| **I/O power supply method** | Supply from the NX bus | **Current capacity of I/O power supply terminal** | IOV: 0.1 A/terminal max.,<br>IOG: 0.1 A/terminal max. |
| **NX Unit power consumption** | • Connected to a CPU Unit<br>0.90 W max.<br>• Connected to a Communications Coupler Unit<br>0.50 W max. | **Current consumption from I/O power supply** | 30 mA max. |
| **Weight** | 65 g max. | | |
| **Circuit layout** | 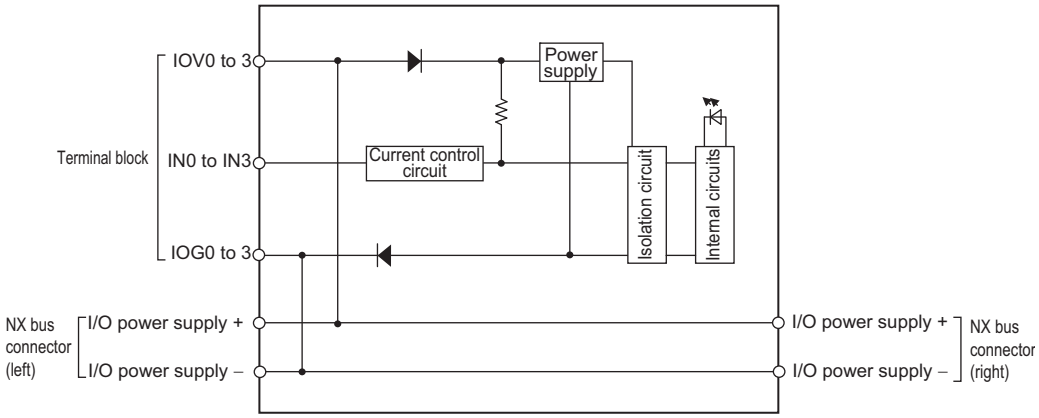 <br> | | |
| **Installation orientation and restrictions** | Installation orientation:<br>• Connected to a CPU Unit: Possible in upright installation.<br>• Connected to a Communications Coupler Unit: Possible in 6 orientations.<br>Restrictions: No restrictions | | |
| **Terminal connection diagram** | 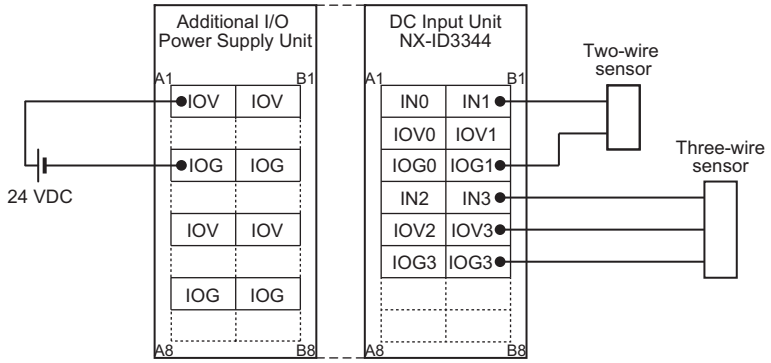 <br> | | |
| **Disconnection/ Short-circuit detection** | Not supported. | **Protective function** | Not supported. |

* This model does not support the input filter. If the Unit is susceptible to noise, take countermeasures such as separating or shielding the Unit and signal lines from the noise source. Refer to NX-series Digital I/O Unit User's Manual (W521) for information on countermeasures.

## NX-ID3417

| | | | |
|---|---|---|---|
| **Unit name** | DC Input Unit | **Model** | NX-ID3417 |
| **Number of points** | 4 points | **External connection terminals** | Screwless clamping terminal block (12 terminals) |
| **I/O refreshing method** | Selectable Synchronous I/O refreshing or Free-Run refreshing | | |
| **Indicators** | TS indicator, input indicator<br> <br> | **Internal I/O common** | PNP |
| | | **Rated input voltage** | 12 to 24 VDC (9 to 28.8 VDC) |
| | | **Input current** | 6 mA typical (at 24 VDC), rated current |
| | | **ON voltage/ON current** | 9 VDC min./3 mA min. (between IOG and each signal) |
| | | **OFF voltage/OFF current** | 2 VDC max./1 mA max. (between IOG and each signal) |
| | | **ON/OFF response time** | 20 µs max./400 µs max. |
| | | **Input filter time** | Without filter, 0.25 ms, 0.5 ms, 1 ms (factory setting), 2 ms, 4 ms, 8 ms, 16 ms, 32 ms, 64 ms, 128 ms, 256 ms |
| **Dimensions** | 12 (W) x 100 (H) x 71 (D) | **Isolation method** | Photocoupler isolation |
| **Insulation resistance** | 20 MΩ min. between isolated circuits (at 100 VDC) | **Dielectric strength** | 510 VAC between isolated circuits for 1 minute at a leakage current of 5 mA max. |
| **I/O power supply method** | Supply from the NX bus | **Current capacity of I/O power supply terminal** | IOV: 0.1 A/terminal max.,<br>IOG: 0.1 A/terminal max. |
| **NX Unit power consumption** | • Connected to a CPU Unit or Communication Control Unit<br>0.90 W max.<br>• Connected to a Communications Coupler Unit<br>0.50 W max. | **Current consumption from I/O power supply** | No consumption |
| **Weight** | 65 g max. | | |
| **Circuit layout** | 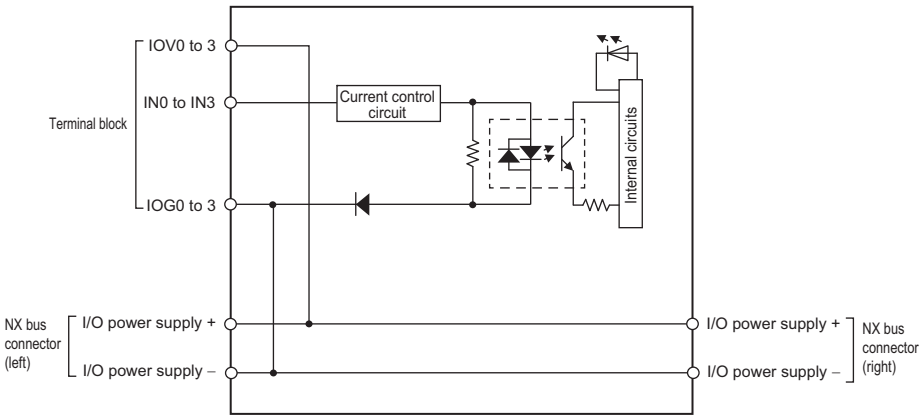 <br> | | |
| **Installation orientation and restrictions** | Installation orientation:<br>• Connected to a CPU Unit or Communication Control Unit: Possible in upright installation.<br>• Connected to a Communications Coupler Unit: Possible in 6 orientations.<br>Restrictions: No restrictions | | |
| **Terminal connection diagram** | 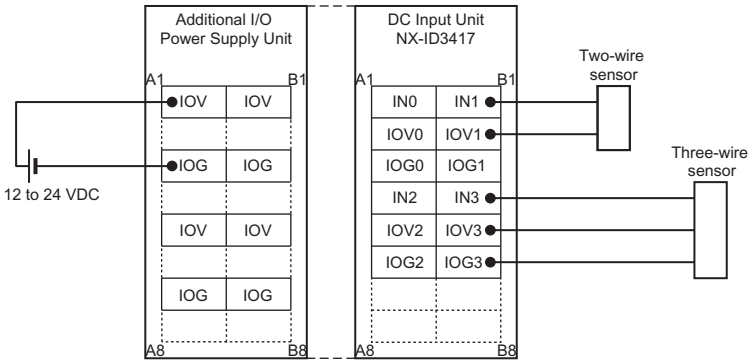 <br> | | |
| **Disconnection/ Short-circuit detection** | Not supported. | **Protective function** | Not supported. |

## NX-ID3443

| | | | |
|---|---|---|---|
| **Unit name** | DC Input Unit | **Model** | NX-ID3443 |
| **Number of points** | 4 points | **External connection terminals** | Screwless clamping terminal block (12 terminals) |
| **I/O refreshing method** | Selectable Synchronous I/O refreshing or Free-Run refreshing | | |
| **Indicators** | TS indicator, input indicator<br> <br> | **Internal I/O common** | PNP |
| | | **Rated input voltage** | 24 VDC (15 to 28.8 VDC) |
| | | **Input current** | 3.5 mA typical (at 24 VDC), rated current |
| | | **ON voltage/ON current** | 15 VDC min./3 mA min. (between IOG and each signal) |
| | | **OFF voltage/OFF current** | 5 VDC max./1 mA max. (between IOG and each signal) |
| | | **ON/OFF response time** | 100 ns max./100 ns max. |
| | | **Input filter time** | Without filter, 1 µs, 2 µs, 4 µs, 8 µs (factory setting),16 µs, 32 µs, 64 µs, 128 µs, 256 µs |
| **Dimensions** | 12 (W) x 100 (H) x 71 (D) | **Isolation method** | Digital isolator isolation |
| **Insulation resistance** | 20 MΩ min. between isolated circuits (at 100 VDC) | **Dielectric strength** | 510 VAC between isolated circuits for 1 minute at a leakage current of 5 mA max. |
| **I/O power supply method** | Supply from the NX bus | **Current capacity of I/O power supply terminal** | IOV: 0.1 A/terminal max.,<br>IOG: 0.1 A/terminal max. |
| **NX Unit power consumption** | • Connected to a CPU Unit or Communication Control Unit<br>0.90 W max.<br>• Connected to a Communications Coupler Unit<br>0.55 W max. | **Current consumption from I/O power supply** | 30 mA max. |
| **Weight** | 65 g max. | | |
| **Circuit layout** | 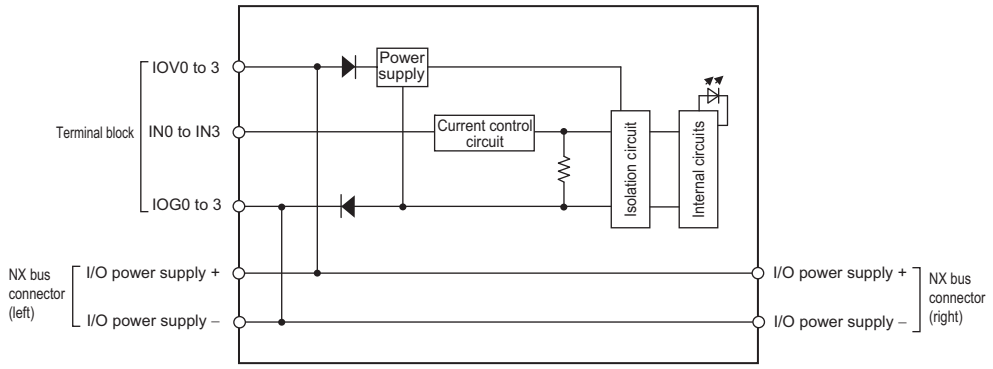 <br> | | |
| **Installation orientation and restrictions** | Installation orientation:<br>• Connected to a CPU Unit or Communication Control Unit: Possible in upright installation.<br>• Connected to a Communications Coupler Unit: Possible in 6 orientations.<br>Restrictions: No restrictions | | |
| **Terminal connection diagram** | 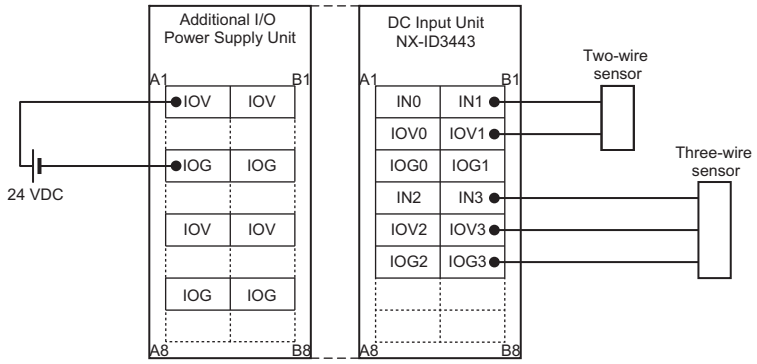 <br> | | |
| **Disconnection/ Short-circuit detection** | Not supported. | **Protective function** | Not supported. |

## NX-ID3444

| | | | |
|---|---|---|---|
| **Unit name** | DC Input Unit | **Model** | NX-ID3444 |
| **Number of points** | 4 points | **External connection terminals** | Screwless clamping terminal block (12 terminals) |
| **I/O refreshing method** | Input refreshing with input changed time | | |
| **Indicators** | TS indicator, input indicators<br> <br> | **Internal I/O common** | PNP |
| | | **Rated input voltage** | 24 VDC (15 to 28.8 VDC) |
| | | **Input current** | 3.5 mA typical (at 24 VDC), rated current |
| | | **ON voltage/ON current** | 15 VDC min./3 mA min.<br>(between IOG and each signal) |
| | | **OFF voltage/OFF current** | 5 VDC max./1 mA max.<br>(between IOG and each signal) |
| | | **ON/OFF response time** | 100 ns max./100 ns max. |
| | | **Input filter time** | No filter* |
| **Dimensions** | 12 (W) x 100 (H) x 71 (D) | **Isolation method** | Digital isolator isolation |
| **Insulation resistance** | 20 MΩ min. between isolated circuits (at 100 VDC) | **Dielectric strength** | 510 VAC between isolated circuits for 1 minute at a leakage current of 5 mA max. |
| **I/O power supply method** | Supply from the NX bus | **Current capacity of I/O power supply terminal** | IOV: 0.1 A/terminal max.,<br>IOG: 0.1 A/terminal max. |
| **NX Unit power consumption** | • Connected to a CPU Unit<br>0.90 W max.<br>• Connected to a Communications Coupler Unit<br>0.50 W max. | **Current consumption from I/O power supply** | 30 mA max. |
| **Weight** | 65 g max. | | |
| **Circuit layout** | 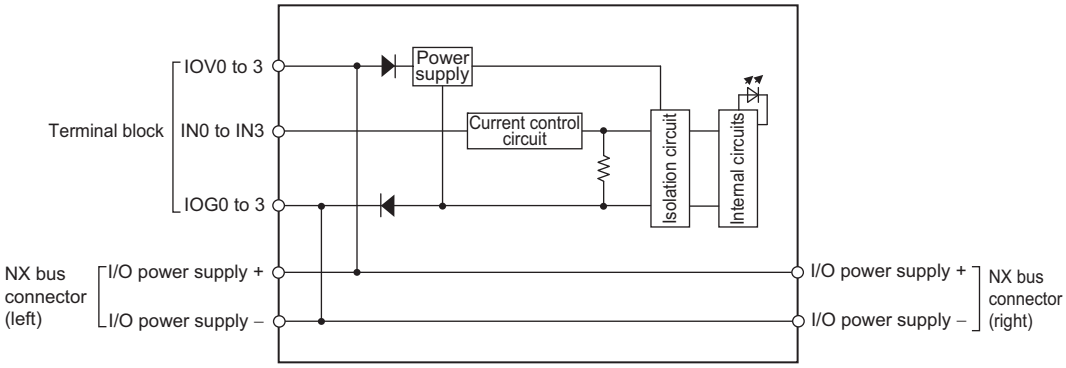 <br> | | |
| **Installation orientation and restrictions** | Installation orientation:<br>• Connected to a CPU Unit: Possible in upright installation.<br>• Connected to a Communications Coupler Unit: Possible in 6 orientations.<br>Restrictions: No restrictions | | |
| **Terminal connection diagram** | 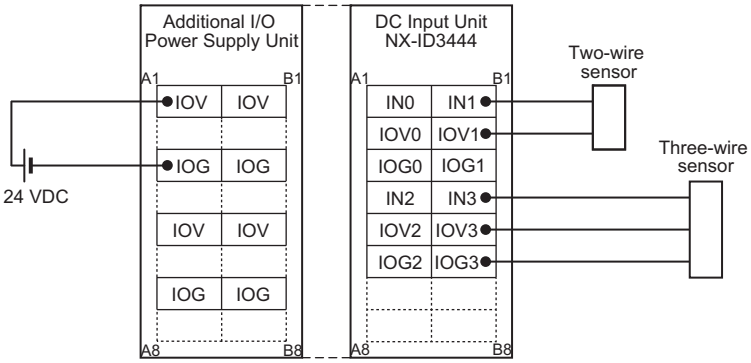 <br> | | |
| **Disconnection/ Short-circuit detection** | Not supported. | **Protective function** | Not supported. |

* This model does not support the input filter. If the Unit is susceptible to noise, take countermeasures such as separating or shielding the Unit and signal lines from the noise source. Refer to NX-series Digital I/O Unit User's Manual (W521) for information on countermeasures.

## NX-ID4342

| | | | |
|---|---|---|---|
| **Unit name** | DC Input Unit | **Model** | NX-ID4342 |
| **Number of points** | 8 points | **External connection terminals** | Screwless clamping terminal block (16 terminals) |
| **I/O refreshing method** | Selectable Synchronous I/O refreshing or Free-Run refreshing | | |
| **Indicators** | TS indicator, input indicator<br> <br> | **Internal I/O common** | NPN |
| | | **Rated input voltage** | 24 VDC (15 to 28.8 VDC) |
| | | **Input current** | 3.5 mA typical (at 24 VDC), rated current |
| | | **ON voltage/ON current** | 15 VDC min./3 mA min. (between IOG and each signal) |
| | | **OFF voltage/OFF current** | 5 VDC max./1 mA max. (between IOG and each signal) |
| | | **ON/OFF response time** | 20 µs max./400 µs max. |
| | | **Input filter time** | Without filter, 0.25 ms, 0.5 ms, 1 ms (factory setting), 2 ms, 4 ms, 8 ms, 16 ms, 32 ms, 64 ms, 128 ms, 256 ms |
| **Dimensions** | 12 (W) x 100 (H) x 71 (D) | **Isolation method** | Photocoupler isolation |
| **Insulation resistance** | 20 MΩ min. between isolated circuits (at 100 VDC) | **Dielectric strength** | 510 VAC between isolated circuits for 1 minute at a leakage current of 5 mA max. |
| **I/O power supply method** | Supply from the NX bus | **Current capacity of I/O power supply terminal** | IOG: 0.1 A/terminal max. |
| **NX Unit power consumption** | • Connected to a CPU Unit or Communication Control Unit<br>0.90 W max.<br>• Connected to a Communications Coupler Unit<br>0.50 W max. | **Current consumption from I/O power supply** | No consumption |
| **Weight** | 65 g max. | | |
| **Circuit layout** | 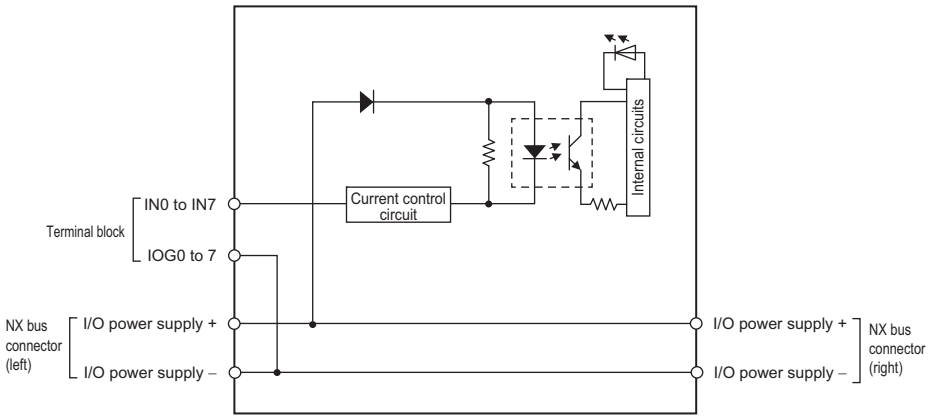 <br> | | |
| **Installation orientation and restrictions** | Installation orientation:<br>• Connected to a CPU Unit or Communication Control Unit: Possible in upright installation.<br>• Connected to a Communications Coupler Unit: Possible in 6 orientations.<br>Restrictions: No restrictions | | |
| **Terminal connection diagram** | 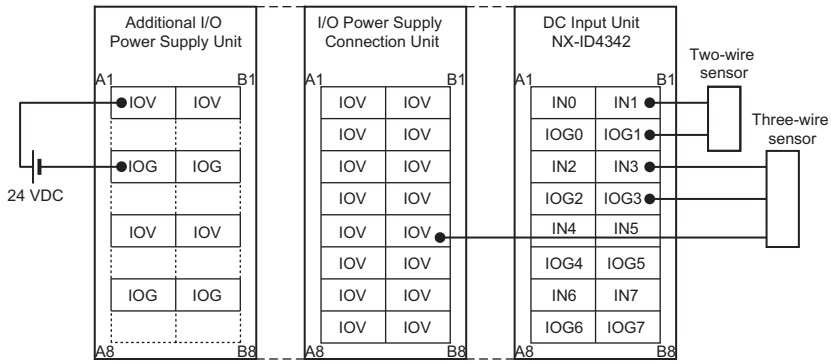 <br> | | |
| **Disconnection/ Short-circuit detection** | Not supported. | **Protective function** | Not supported. |

## NX-ID4442

| | | | |
|---|---|---|---|
| **Unit name** | DC Input Unit | **Model** | NX-ID4442 |
| **Number of points** | 8 points | **External connection terminals** | Screwless clamping terminal block (16 terminals) |
| **I/O refreshing method** | Selectable Synchronous I/O refreshing or Free-Run refreshing | | |
| **Indicators** | TS indicator, input indicator<br>ID4442 TS<br>0 1<br>2 3<br>4 5<br>6 7 | **Internal I/O common** | PNP |
| | | **Rated input voltage** | 24 VDC (15 to 28.8 VDC) |
| | | **Input current** | 3.5 mA typical (at 24 VDC), rated current |
| | | **ON voltage/ON current** | 15 VDC min./3 mA min. (between IOG and each signal) |
| | | **OFF voltage/OFF current** | 5 VDC max./1 mA max. (between IOG and each signal) |
| | | **ON/OFF response time** | 20 µs max./400 µs max. |
| | | **Input filter time** | Without filter, 0.25 ms, 0.5 ms, 1 ms (factory setting), 2 ms, 4 ms, 8 ms, 16 ms, 32 ms, 64 ms, 128 ms, 256 ms |
| **Dimensions** | 12 (W) x 100 (H) x 71 (D) | **Isolation method** | Photocoupler isolation |
| **Insulation resistance** | 20 MΩ min. between isolated circuits (at 100 VDC) | **Dielectric strength** | 510 VAC between isolated circuits for 1 minute at a leakage current of 5 mA max. |
| **I/O power supply method** | Supply from the NX bus | **Current capacity of I/O power supply terminal** | IOV: 0.1 A/terminal max. |
| **NX Unit power consumption** | • Connected to a CPU Unit or Communication Control Unit<br>0.90 W max.<br>• Connected to a Communications Coupler Unit<br>0.50 W max. | **Current consumption from I/O power supply** | No consumption |
| **Weight** | 65 g max. | | |
| **Circuit layout** | 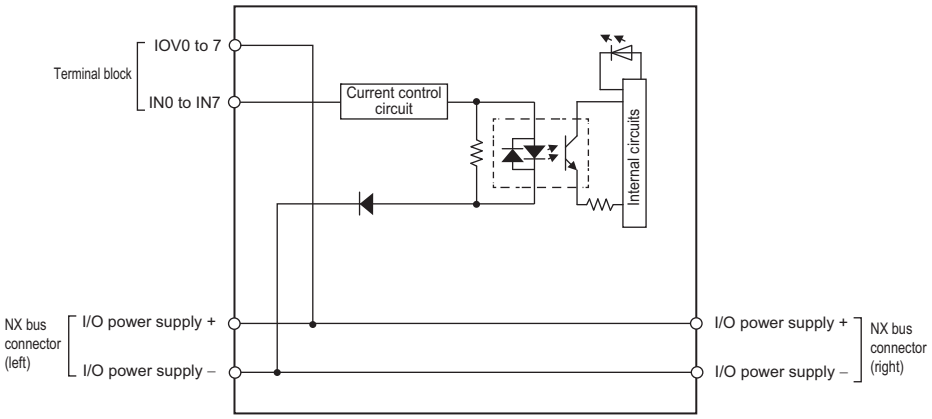 | | |
| **Installation orientation and restrictions** | Installation orientation:<br>• Connected to a CPU Unit or Communication Control Unit: Possible in upright installation.<br>• Connected to a Communications Coupler Unit: Possible in 6 orientations.<br>Restrictions: No restrictions | | |
| **Terminal connection diagram** | 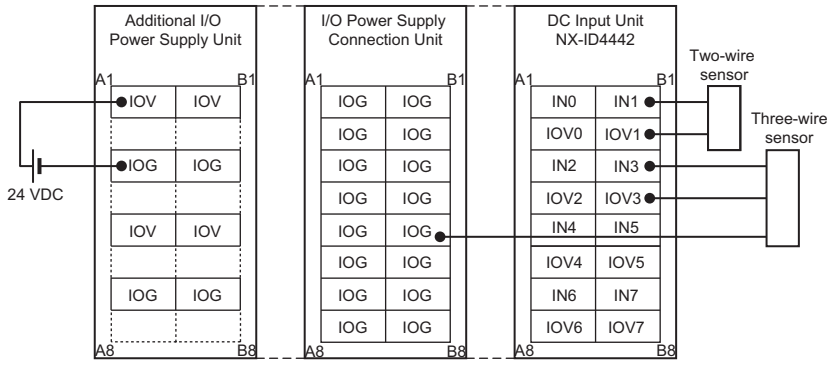 | | |
| **Disconnection/ Short-circuit detection** | Not supported. | **Protective function** | Not supported. |

## NX-ID5342

| | | | |
|---|---|---|---|
| **Unit name** | DC Input Unit | **Model** | NX-ID5342 |
| **Number of points** | 16 points | **External connection terminals** | Screwless clamping terminal block (16 terminals) |
| **I/O refreshing method** | Selectable Synchronous I/O refreshing or Free-Run refreshing | | |
| **Indicators** | TS indicator, input indicator<br> <br> | **Internal I/O common** | NPN |
| | | **Rated input voltage** | 24 VDC (15 to 28.8 VDC) |
| | | **Input current** | 2.5 mA typical (at 24 VDC), rated current |
| | | **ON voltage/ON current** | 15 VDC min./2 mA min. (between IOG and each signal) |
| | | **OFF voltage/OFF current** | 5 VDC max./0.5 mA max. (between IOG and each signal) |
| | | **ON/OFF response time** | 20 µs max./400 µs max. |
| | | **Input filter time** | Without filter, 0.25 ms, 0.5 ms, 1 ms (factory setting), 2 ms, 4 ms, 8 ms, 16 ms, 32 ms, 64 ms, 128 ms, 256 ms |
| **Dimensions** | 12 (W) x 100 (H) x 71 (D) | **Isolation method** | Photocoupler isolation |
| **Insulation resistance** | 20 MΩ min. between isolated circuits (at 100 VDC) | **Dielectric strength** | 510 VAC between isolated circuits for 1 minute at a leakage current of 5 mA max. |
| **I/O power supply method** | Supply from the NX bus | **Current capacity of I/O power supply terminal** | Without I/O power supply terminals |
| **NX Unit power consumption** | • Connected to a CPU Unit or Communication Control Unit<br>0.90 W max.<br>• Connected to a Communications Coupler Unit<br>0.55 W max. | **Current consumption from I/O power supply** | No consumption |
| **Weight** | 65 g max. | | |
| **Circuit layout** | 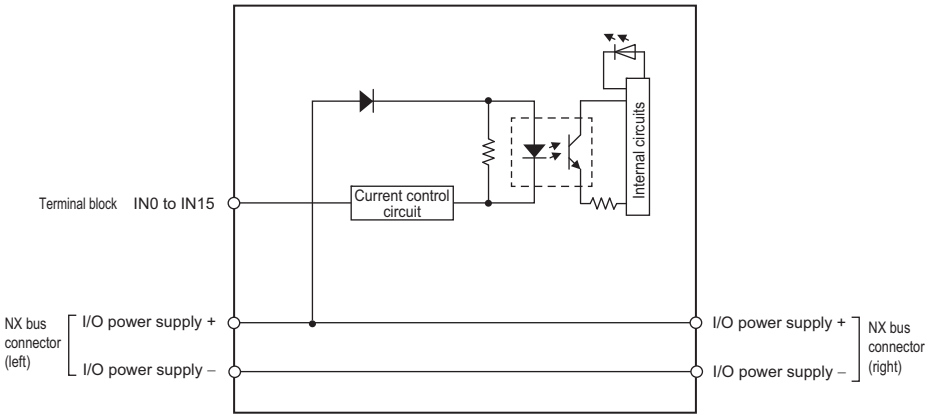 <br> | | |
| **Installation orientation and restrictions** | Installation orientation:<br>• Connected to a CPU Unit or Communication Control Unit: Possible in upright installation.<br>• Connected to a Communications Coupler Unit: Possible in 6 orientations.<br>Restrictions: No restrictions | | |
| **Terminal connection diagram** | 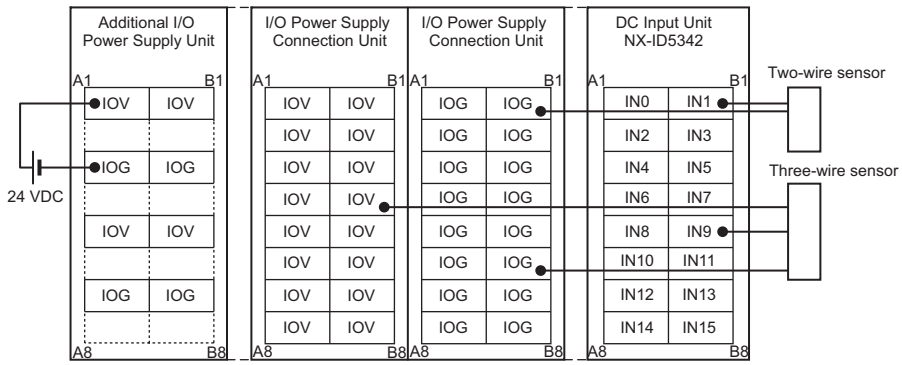 <br> | | |
| **Disconnection/ Short-circuit detection** | Not supported. | **Protective function** | Not supported. |

## NX-ID5442

| | | | |
|---|---|---|---|
| **Unit name** | DC Input Unit | **Model** | NX-ID5442 |
| **Number of points** | 16 points | **External connection terminals** | Screwless clamping terminal block (16 terminals) |
| **I/O refreshing method** | Selectable Synchronous I/O refreshing or Free-Run refreshing | | |
| **Indicators** | TS indicator, input indicator<br> <br> | **Internal I/O common** | PNP |
| | | **Rated input voltage** | 24 VDC (15 to 28.8 VDC) |
| | | **Input current** | 2.5 mA typical (at 24 VDC), rated current |
| | | **ON voltage/ON current** | 15 VDC min./2 mA min. (between IOG and each signal) |
| | | **OFF voltage/OFF current** | 5 VDC max./0.5 mA max. (between IOG and each signal) |
| | | **ON/OFF response time** | 20 µs max./400 µs max. |
| | | **Input filter time** | Without filter, 0.25 ms, 0.5 ms, 1 ms (factory setting), 2 ms, 4 ms, 8 ms, 16 ms, 32 ms, 64 ms, 128 ms, 256 ms |
| **Dimensions** | 12 (W) x 100 (H) x 71 (D) | **Isolation method** | Photocoupler isolation |
| **Insulation resistance** | 20 MΩ min. between isolated circuits (at 100 VDC) | **Dielectric strength** | 510 VAC between isolated circuits for 1 minute at a leakage current of 5 mA max. |
| **I/O power supply method** | Supply from the NX bus | **Current capacity of I/O power supply terminal** | Without I/O power supply terminals |
| **NX Unit power consumption** | • Connected to a CPU Unit or Communication Control Unit<br>0.90 W max.<br>• Connected to a Communications Coupler Unit<br>0.55 W max. | **Current consumption from I/O power supply** | No consumption |
| **Weight** | 65 g max. | | |
| **Circuit layout** | 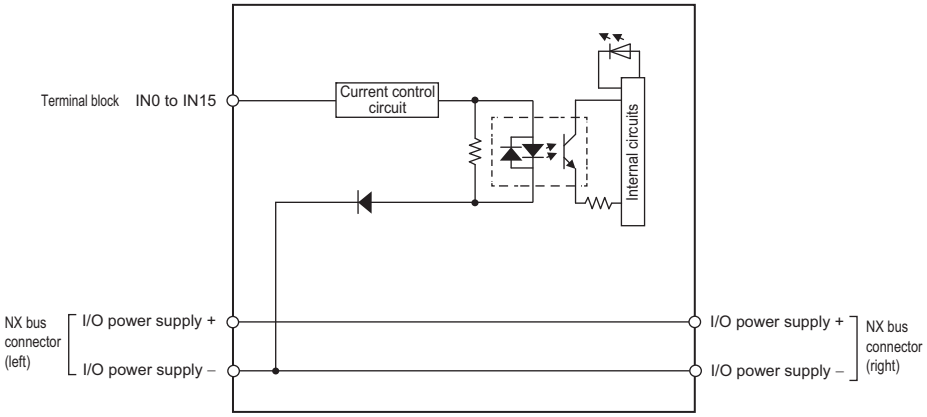 <br> | | |
| **Installation orientation and restrictions** | Installation orientation:<br>• Connected to a CPU Unit or Communication Control Unit: Possible in upright installation.<br>• Connected to a Communications Coupler Unit: Possible in 6 orientations.<br>Restrictions: No restrictions | | |
| **Terminal connection diagram** | 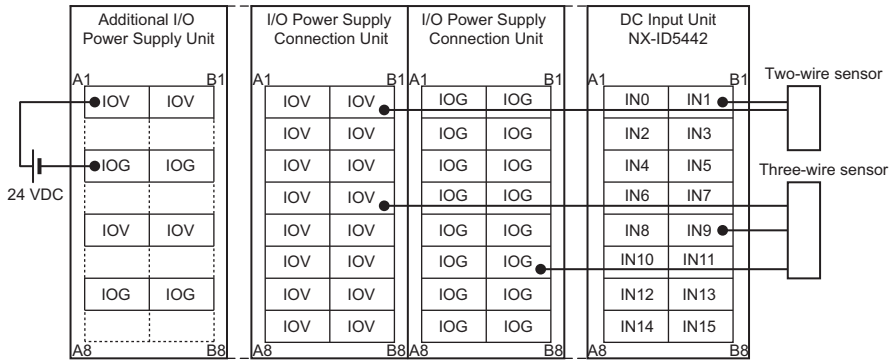 <br> | | |
| **Disconnection/ Short-circuit detection** | Not supported. | **Protective function** | Not supported. |

## ● DC Input Unit (M3 Screw Terminal Block, 30 mm Width)
## NX-ID5142-1

| | | | |
|---|---|---|---|
| **Unit name** | DC Input Unit | **Model** | NX-ID5142-1 |
| **Number of points** | 16 points | **External connection terminals** | M3 screw terminal block (18 terminals) |
| **I/O refreshing method** | Switching Synchronous I/O refreshing and Free-Run refreshing | | |
| **Indicators** | TS indicator, input indicators<br> 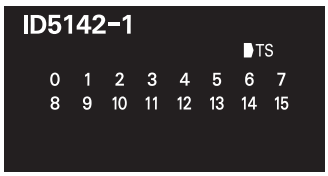 <br> | **Internal I/O common** | For both NPN/PNP |
| | | **Rated input voltage** | 24 VDC (15 to 28.8 VDC) |
| | | **Input current** | 7 mA typical (at 24 VDC) |
| | | **ON voltage/ON current** | 15 VDC min./3 mA min. (between COM and each signal) |
| | | **OFF voltage/OFF current** | 5 VDC max./1 mA max. (between COM and each signal) |
| | | **ON/OFF response time** | 20 µs max./400 µs max. |
| | | **Input filter time** | No filter, 0.25 ms, 0.5 ms, 1 ms (default), 2 ms, 4 ms, 8 ms, 16 ms, 32 ms, 64 ms, 128 ms, 256 ms |
| **Dimensions** | 30 (W) x 100 (H) x 71 (D) | **Isolation method** | Photocoupler isolation |
| **Insulation resistance** | 20 MΩ min. between isolated circuits (at 100 VDC) | **Dielectric strength** | 510 VAC between isolated circuits for 1 minute at a leakage current of 5 mA max. |
| **I/O power supply method** | Supply from external source | **Current capacity of I/O power supply terminal** | Without I/O power supply terminals |
| **NX Unit power consumption** | • Connected to a CPU Unit or Communication Control Unit<br>0.85 W max.<br>• Connected to a Communications Coupler Unit<br>0.55 W max. | **Current consumption from I/O power supply** | No consumption |
| **Weight** | 125 g max. | | |
| **Circuit layout** | 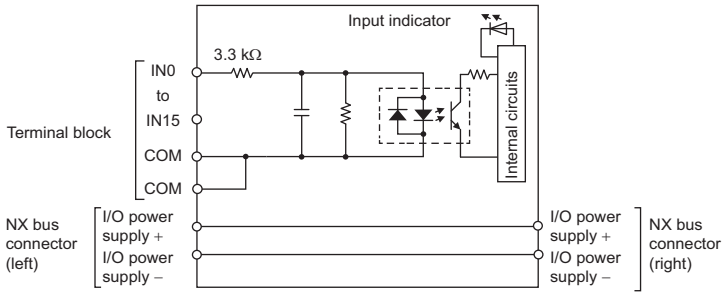 <br> | | |

**Installation orientation and restrictions**

Installation orientation:
- Connected to a CPU Unit or Communication Control Unit: Possible in upright installation.
- Connected to a Communications Coupler Unit: Possible in 6 orientations.

Restrictions: As shown in the following.

- For upright installation

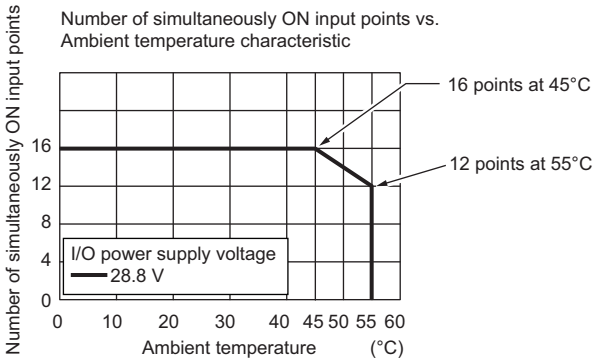


- For any installation other than upright

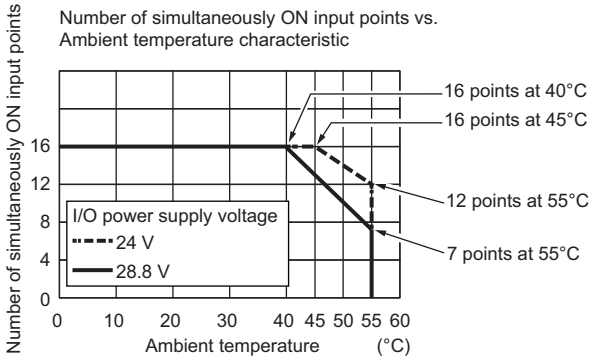


**Terminal connection diagram**

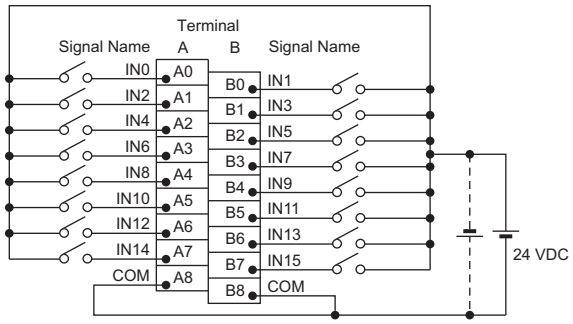


- The polarity of the input power supply can be connected in either direction.

| | | | |
|---|---|---|---|
| **Disconnection/ Short-circuit detection** | Not supported. | **Protective function** | Not supported. |

## ● DC Input Unit (MIL Connector, 30 mm Width)
## NX-ID5142-5

| | | | |
|---|---|---|---|
| **Unit name** | DC Input Unit | **Model** | NX-ID5142-5 |
| **Number of points** | 16 points | **External connection terminals** | MIL connector (20 terminals) |
| **I/O refreshing method** | Switching Synchronous I/O refreshing and Free-Run refreshing | | |
| **Indicators** | TS indicator, input indicators<br> 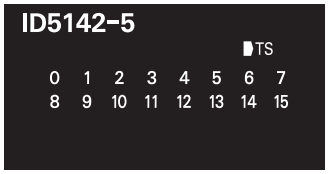 <br> | **Internal I/O common** | For both NPN/PNP |
| | | **Rated input voltage** | 24 VDC (15 to 28.8 VDC) |
| | | **Input current** | 7 mA typical (at 24 VDC) |
| | | **ON voltage/ON current** | 15 VDC min./3 mA min.<br>(between COM and each signal) |
| | | **OFF voltage/OFF current** | 5 VDC max./1 mA max.<br>(between COM and each signal) |
| | | **ON/OFF response time** | 20 µs max./400 µs max. |
| | | **Input filter time** | No filter, 0.25 ms, 0.5 ms, 1 ms (default),<br>2 ms, 4 ms, 8 ms, 16 ms, 32 ms, 64 ms, 128 ms, 256 ms |
| **Dimensions** | 30 (W) x 100 (H) x 71 (D) | **Isolation method** | Photocoupler isolation |
| **Insulation resistance** | 20 MΩ min. between isolated circuits<br>(at 100 VDC) | **Dielectric strength** | 510 VAC between isolated circuits for<br>1 minute at a leakage current of 5 mA max. |
| **I/O power supply method** | Supply from external source | **Current capacity of I/O power supply terminal** | Without I/O power supply terminals |
| **NX Unit power consumption** | • Connected to a CPU Unit or Communication Control Unit<br>0.85 W max.<br>• Connected to a Communications Coupler Unit<br>0.55 W max. | **Current consumption from I/O power supply** | No consumption |
| **Weight** | 85 g max. | | |
| **Circuit layout** | 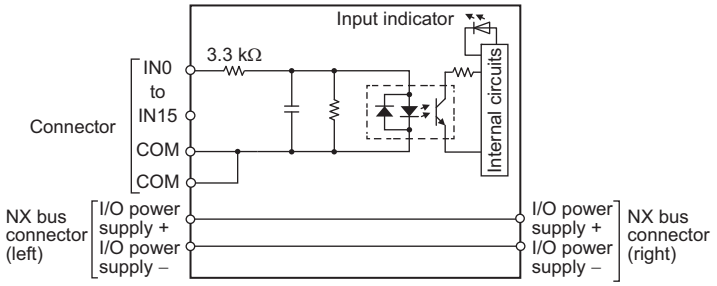 <br> | | |

**Installation orientation and restrictions**

Installation orientation:
- Connected to a CPU Unit or Communication Control Unit: Possible in upright installation.
- Connected to a Communications Coupler Unit: Possible in 6 orientations.

Restrictions: As shown in the following.

- For upright installation

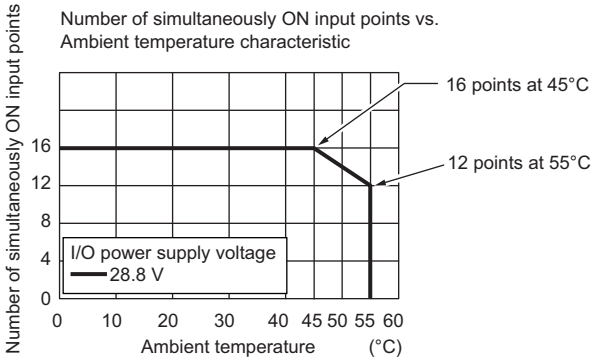


- For any installation other than upright

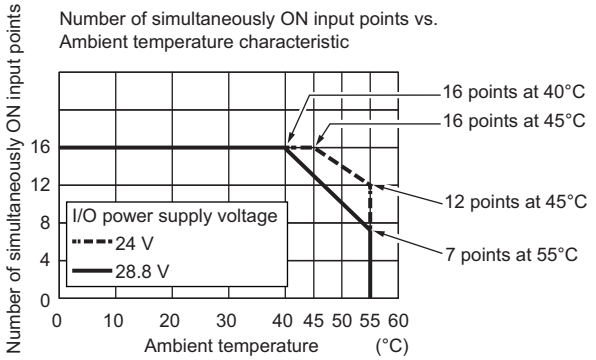


**Terminal connection diagram**

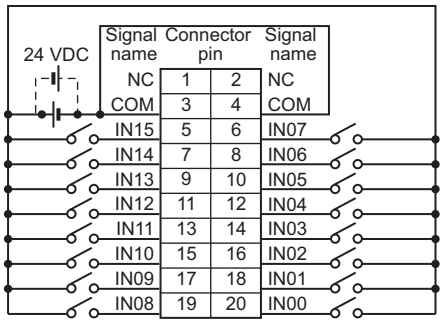


| Signal name | Connector pin | | Signal name |
|---|---|---|---|
| NC | 1 | 2 | NC |
| COM | 3 | 4 | COM |
| IN15 | 5 | 6 | IN07 |
| IN14 | 7 | 8 | IN06 |
| IN13 | 9 | 10 | IN05 |
| IN12 | 11 | 12 | IN04 |
| IN11 | 13 | 14 | IN03 |
| IN10 | 15 | 16 | IN02 |
| IN09 | 17 | 18 | IN01 |
| IN08 | 19 | 20 | IN00 |

- The polarity of the input power supply can be connected in either direction.
- Be sure to wire both pins 3 and 4 (COM), and set the same polarity for both pins.

| **Disconnection/ Short-circuit detection** | Not supported. | **Protective function** | Not supported. |
|---|---|---|---|

## NX-ID6142-5

| | | | |
|---|---|---|---|
| **Unit name** | DC Input Unit | **Model** | NX-ID6142-5 |
| **Number of points** | 32 points | **External connection terminals** | MIL connector (40 terminals) |
| **I/O refreshing method** | Switching Synchronous I/O refreshing and Free-Run refreshing | | |
| **Indicators** | TS indicator, input indicators<br> 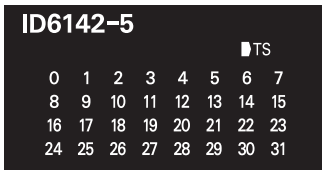 <br> | **Internal I/O common** | For both NPN/PNP |
| | | **Rated input voltage** | 24 VDC (19 to 28.8 VDC) |
| | | **Input current** | 4.1 mA typical (24 VDC) |
| | | **ON voltage/ON current** | 19 VDC min./3 mA min.<br>(between COM and each signal) |
| | | **OFF voltage/OFF current** | 5 VDC max./1 mA max.<br>(between COM and each signal) |
| | | **ON/OFF response time** | 20 µs max./400 µs max. |
| | | **Input filter time** | No filter, 0.25 ms, 0.5 ms, 1 ms (default),<br>2 ms, 4 ms, 8 ms, 16 ms, 32 ms, 64 ms, 128 ms,<br>256 ms |
| **Dimensions** | 30 (W) x 100 (H) x 71 (D) | **Isolation method** | Photocoupler isolation |
| **Insulation resistance** | 20 MΩ min. between isolated circuits<br>(at 100 VDC) | **Dielectric strength** | 510 VAC between isolated circuits for<br>1 minute at a leakage current of 5 mA max. |
| **I/O power supply method** | Supply from external source | **Current capacity of I/O power supply terminal** | Without I/O power supply terminals |
| **NX Unit power consumption** | • Connected to a CPU Unit or Communication Control Unit<br>0.90 W max.<br>• Connected to a Communications Coupler Unit<br>0.60 W max. | **Current consumption from I/O power supply** | No consumption |
| **Weight** | 90 g max. | | |
| **Circuit layout** | 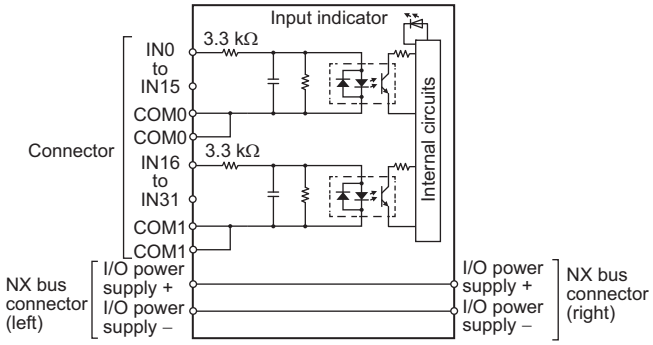 <br> | | |

**Installation orientation and restrictions**

Installation orientation:
- Connected to a CPU Unit or Communication Control Unit: Possible in upright installation.
- Connected to a Communications Coupler Unit: Possible in 6 orientations.

Restrictions: As shown in the following.

- For upright installation

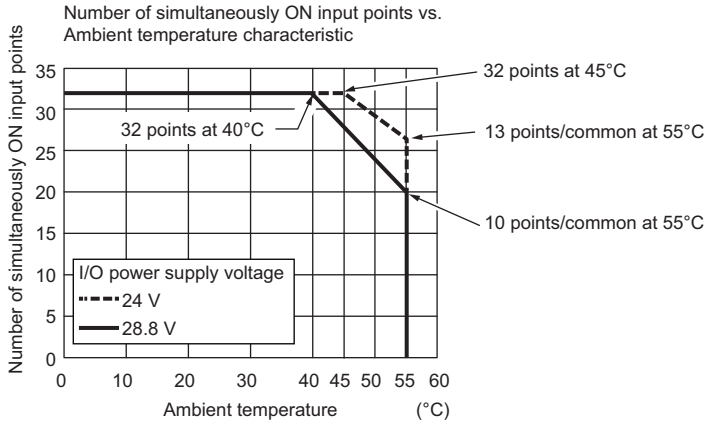


- For any installation other than upright

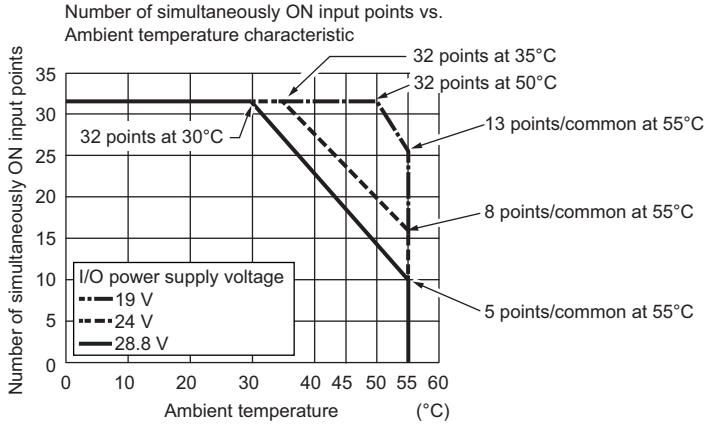


**Terminal connection diagram**

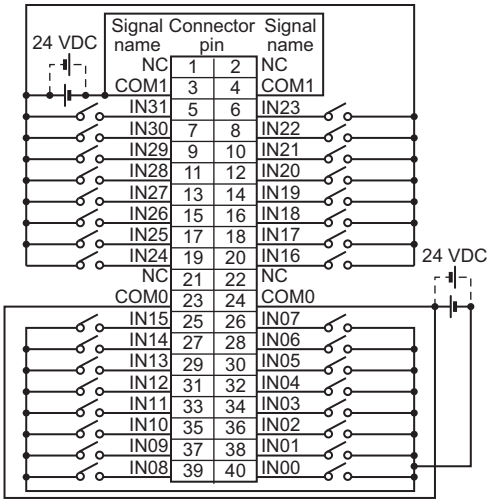


- The polarity of the input power supply can be connected in either direction.
- Be sure to wire both pins 23 and 24 (COM0), and set the same polarity for both pins.
- Be sure to wire both pins 3 and 4 (COM1), and set the same polarity for both pins.

| | | | |
|---|---|---|---|
| **Disconnection/ Short-circuit detection** | Not supported. | **Protective function** | Not supported. |

## ● DC Input Unit (Fujitsu Connector, 30 mm Width)
## NX-ID6142-6

| | | | |
|---|---|---|---|
| **Unit name** | DC Input Unit | **Model** | NX-ID6142-6 |
| **Number of points** | 32 points | **External connection terminals** | Fujitsu connector (40 terminals) |
| **I/O refreshing method** | Switching Synchronous I/O refreshing and Free-Run refreshing | | |
| **Indicators** | TS indicator, input indicators<br>ID6142-6<br>TS<br>0 1 2 3 4 5 6 7<br>8 9 10 11 12 13 14 15<br>16 17 18 19 20 21 22 23<br>24 25 26 27 28 29 30 31 | **Internal I/O common** | For both NPN/PNP |
| | | **Rated input voltage** | 24 VDC (19 to 28.8 VDC) |
| | | **Input current** | 4.1 mA typical (24 VDC) |
| | | **ON voltage/ON current** | 19 VDC min./3 mA min.<br>(between COM and each signal) |
| | | **OFF voltage/OFF current** | 5 VDC max./1 mA max.<br>(between COM and each signal) |
| | | **ON/OFF response time** | 20 µs max./400 µs max. |
| | | **Input filter time** | No filter, 0.25 ms, 0.5 ms, 1 ms (default), 2 ms, 4 ms, 8 ms, 16 ms, 32 ms, 64 ms, 128 ms, 256 ms |
| **Dimensions** | 30 (W) x 100 (H) x 71 (D) | **Isolation method** | Photocoupler isolation |
| **Insulation resistance** | 20 MΩ min. between isolated circuits<br>(at 100 VDC) | **Dielectric strength** | 510 VAC between isolated circuits for 1 minute at a leakage current of 5 mA max. |
| **I/O power supply method** | Supply from external source | **Current capacity of I/O power supply terminal** | Without I/O power supply terminals |
| **NX Unit power consumption** | • Connected to a CPU Unit or Communication Control Unit<br>0.95 W max.<br>• Connected to a Communications Coupler Unit<br>0.55 W max. | **Current consumption from I/O power supply** | No consumption |
| **Weight** | 90 g max. | | |
| **Circuit layout** | 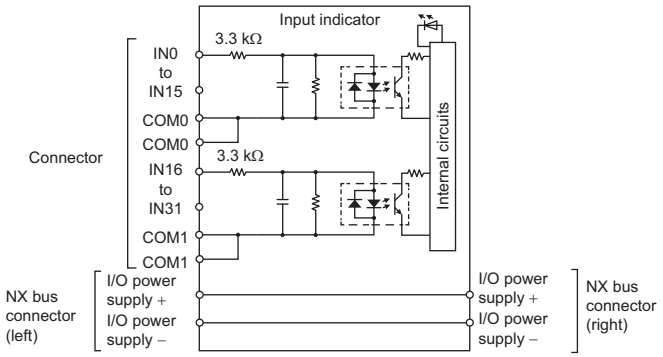 | | |

**Installation orientation and restrictions**

Installation orientation:
- Connected to a CPU Unit or Communication Control Unit: Possible in upright installation.
- Connected to a Communications Coupler Unit: Possible in 6 orientations.

Restrictions: As shown in the following.

• For upright installation

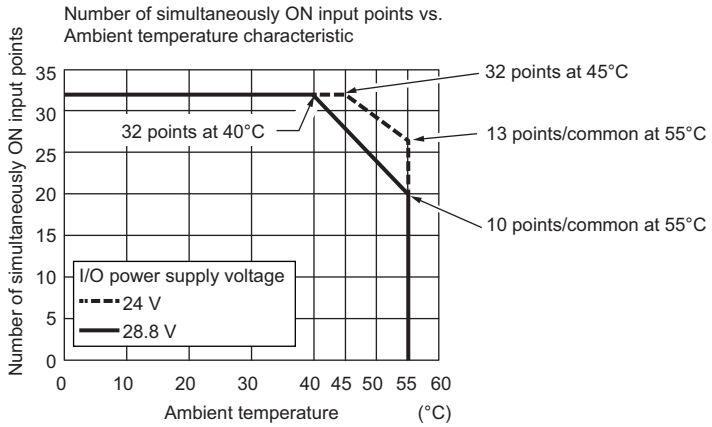


• For any installation other than upright

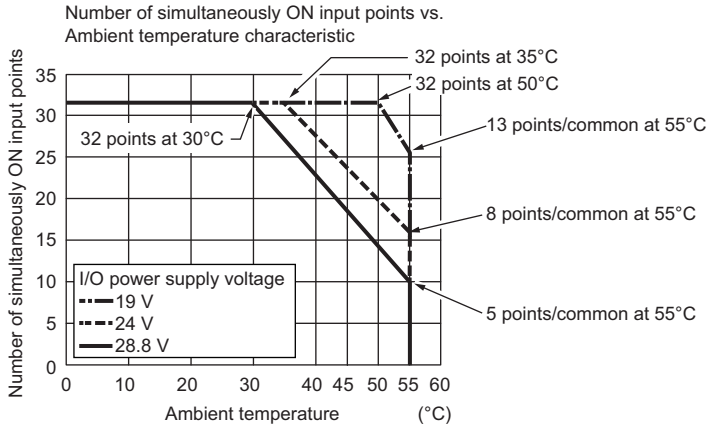


**Terminal connection diagram**

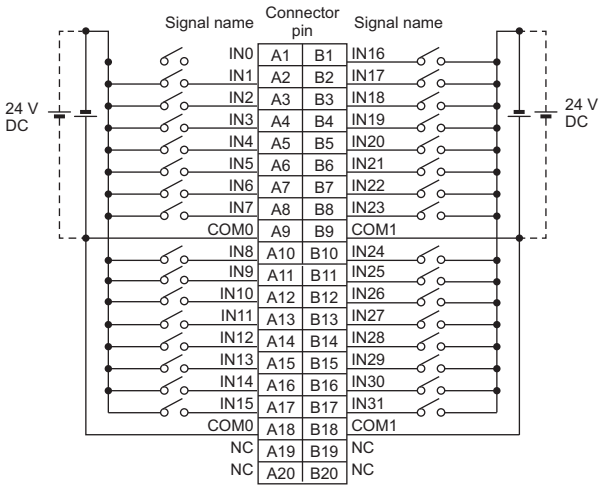


- The polarity of the input power supply can be connected in either direction.
- Be sure to wire both pins A9 and A18 (COM0), and set the same polarity for both pins.
- Be sure to wire both pins B9 and B18 (COM1), and set the same polarity for both pins.

| | | | |
|---|---|---|---|
| **Disconnection/ Short-circuit detection** | Not supported. | **Protective function** | Not supported. |

## ● AC Input Unit (Screwless Clamping Terminal Block, 12 mm Width)
## NX-IA3117

| | | | |
|---|---|---|---|
| **Unit name** | AC Input Unit | **Model** | NX-IA3117 |
| **Number of points** | 4 points, independent contacts | **External connection terminals** | Screwless clamping terminal block<br>(8 terminals) |
| **Capacity** | Free-Run refreshing | | |
| **Indicators** | TS indicator, input indicator<br> | **Internal I/O common** | No polarity |
| | | **Rated input voltage** | 200 to 240 VAC, 50/60 Hz<br>(170 to 264 VAC, ±3 Hz) |
| | | **Input current** | 9 mA typical (at 200 VAC, 50 Hz)<br>11 mA typical (at 200 VAC, 60 Hz) |
| | | **ON voltage/ON current** | 120 VAC min./4 mA min. |
| | | **OFF voltage/OFF current** | 40 VAC max./2 mA max. |
| | | **ON/OFF response time** | 10 ms max./40 ms max. |
| | | **Input filter time** | No filter, 0.25 ms, 0.5 ms, 1 ms (default),<br>2 ms, 4 ms, 8 ms, 16 ms, 32 ms, 64 ms, 128 ms, 256 ms |
| **Dimensions** | 12 (W) x 100 (H) x 71 (D) | **Isolation method** | Photocoupler isolation |
| **Insulation resistance** | Between each AC input circuit: 20 MΩ min. (at 500 VDC)<br>Between the external terminals and the functional ground terminal: 20 MΩ min. (at 500 VDC)<br>Between the external terminals and internal circuits: 20 MΩ min. (at 500 VDC)<br>Between the internal circuit and the functional ground terminal: 20 MΩ min. (at 100 VDC) | **Dielectric strength** | Between each AC input circuit: AC3700V VAC for 1 min at a leakage current of 5 mA max.<br>Between the external terminals and functional ground terminal: 2300 VAC for 1 min at a leakage current of 5 mA max.<br>Between the external terminals and internal circuits: 2300 VAC for 1 min at a leakage current of 5 mA max.<br>Between the internal circuit and the functional ground terminal: 510 VAC for 1 min at a leakage current of 5 mA max. |
| **I/O power supply method** | Supplied from external source. | **Current capacity of I/O power supply terminal** | Without I/O power supply terminals |
| **NX Unit power consumption** | • Connected to a CPU Unit or Communication Control Unit<br>0.80 W max.<br>• Connected to a Communications Coupler Unit<br>0.50 W max. | **Current consumption from I/O power supply** | No consumption |
| **Weight** | 60 g max. | | |
| **Circuit layout** | 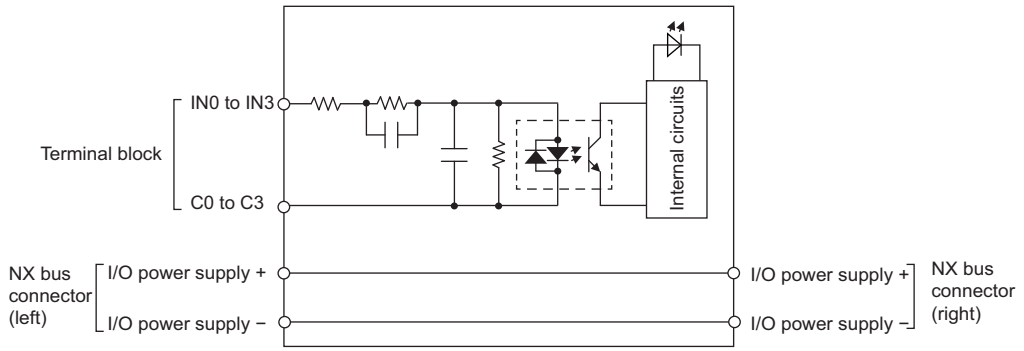 | | |
| **Installation orientation and restrictions** | Installation orientation:<br>• Connected to a CPU Unit or Communication Control Unit: Possible in upright installation.<br>• Connected to a Communications Coupler Unit: Possible in 6 orientations.<br>Restrictions: No restrictions | | |
| **Terminal connection diagram** | 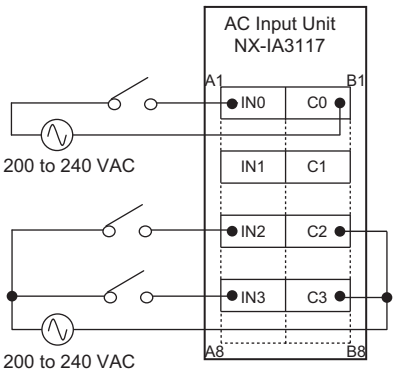 | | |
| **Disconnection/ Short-circuit detection** | Not supported. | **Protective function** | Not supported. |

# Digital Output Unit Specifications

## ● Transistor Output Unit (Screwless Clamping Terminal Block, 12 mm Width) NX-OD2154

| | | | |
|---|---|---|---|
| **Unit name** | Transistor Output Unit | **Model** | NX-OD2154 |
| **Number of points** | 2 points | **External connection terminals** | Screwless clamping terminal block (8 terminals) |
| **I/O refreshing method** | Output refreshing with specified time stamp | | |
| **Indicators** | TS indicator, output indicator<br> <br> | **Internal I/O common** | NPN |
| | | **Rated voltage** | 24 VDC |
| | | **Operating load voltage range** | 15 to 28.8 VDC |
| | | **Maximum value of load current** | 0.5 A/point, 1 A/Unit |
| | | **Maximum inrush current** | 4.0 A/point, 10 ms max. |
| | | **Leakage current** | 0.1 mA max. |
| | | **Residual voltage** | 1.5 V max. |
| | | **ON/OFF response time** | 300 ns max./300 ns max. |
| **Dimensions** | 12 (W) x 100 (H) x 71 (D) | **Isolation method** | Digital isolator isolation |
| **Insulation resistance** | 20 MΩ min. between isolated circuits (at 100 VDC) | **Dielectric strength** | 510 VAC between isolated circuits for 1 minute at a leakage current of 5 mA max. |
| **I/O power supply method** | Supply from the NX bus | **Current capacity of I/O power supply terminal** | IOV: 0.5 A/terminal max.,<br>IOG: 0.5 A/terminal max. |
| **NX Unit power consumption** | • Connected to a CPU Unit<br>0.85 W max.<br>• Connected to a Communications Coupler Unit<br>0.45 W max. | **I/O current consumption** | 30 mA max. |
| **Weight** | 70 g max. | | |
| **Circuit layout** | 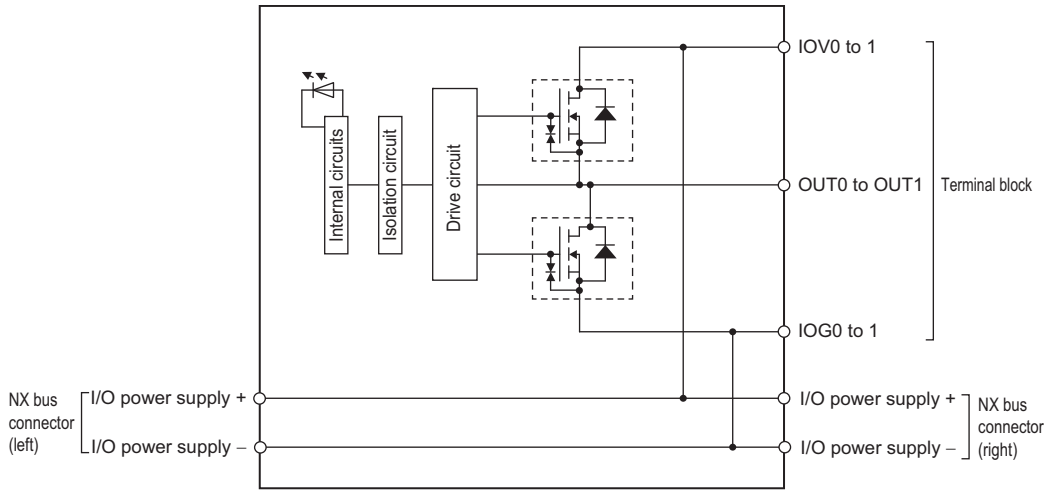 <br><br>This unit uses a push-pull output circuit. | | |
| **Installation orientation and restrictions** | Installation orientation:<br>• Connected to a CPU Unit: Possible in upright installation.<br>• Connected to a Communications Coupler Unit: Possible in 6 orientations.<br>Restrictions: No restrictions | | |
| **Terminal connection diagram** | 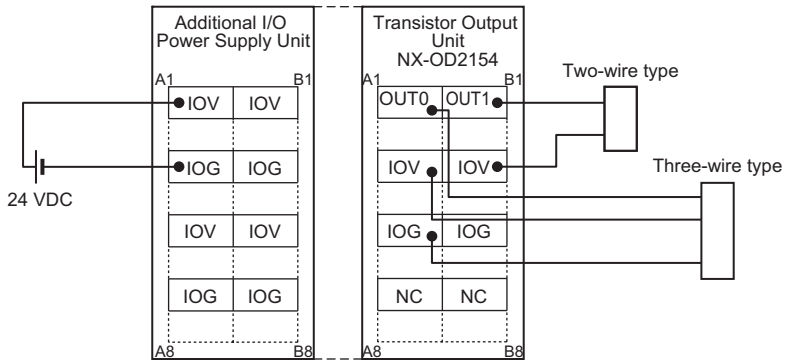 <br> | | |
| **Disconnection/ Short-circuit detection** | Not supported. | **Protective function** | Not supported. |

## NX-OD2258

| | | | |
|---|---|---|---|
| **Unit name** | Transistor Output Unit | **Model** | NX-OD2258 |
| **Number of points** | 2 points | **External connection terminals** | Screwless clamping terminal block (8 terminals) |
| **I/O refreshing method** | Output refreshing with specified time stamp | | |
| **Indicators** | TS indicator, output indicator<br> <br> | **Internal I/O common** | PNP |
| | | **Rated voltage** | 24 VDC |
| | | **Operating load voltage range** | 15 to 28.8 VDC |
| | | **Maximum value of load current** | 0.5 A/point, 1 A/Unit |
| | | **Maximum inrush current** | 4.0 A/point, 10 ms max. |
| | | **Leakage current** | 0.1 mA max. |
| | | **Residual voltage** | 1.5 V max. |
| | | **ON/OFF response time** | 300 ns max./300 ns max. |
| **Dimensions** | 12 (W) x 100 (H) x 71 (D) | **Isolation method** | Digital isolator isolation |
| **Insulation resistance** | 20 MΩ min. between isolated circuits (at 100 VDC) | **Dielectric strength** | 510 VAC between isolated circuits for 1 minute at a leakage current of 5 mA max. |
| **I/O power supply method** | Supply from the NX bus | **Current capacity of I/O power supply terminal** | IOV: 0.5 A/terminal max.,<br>IOG: 0.5 A/terminal max. |
| **NX Unit power consumption** | • Connected to a CPU Unit<br>0.85 W max.<br>• Connected to a Communications Coupler Unit<br>0.50 W max. | **I/O current consumption** | 40 mA max. |
| **Weight** | 70 g max. | | |
| **Circuit layout** | 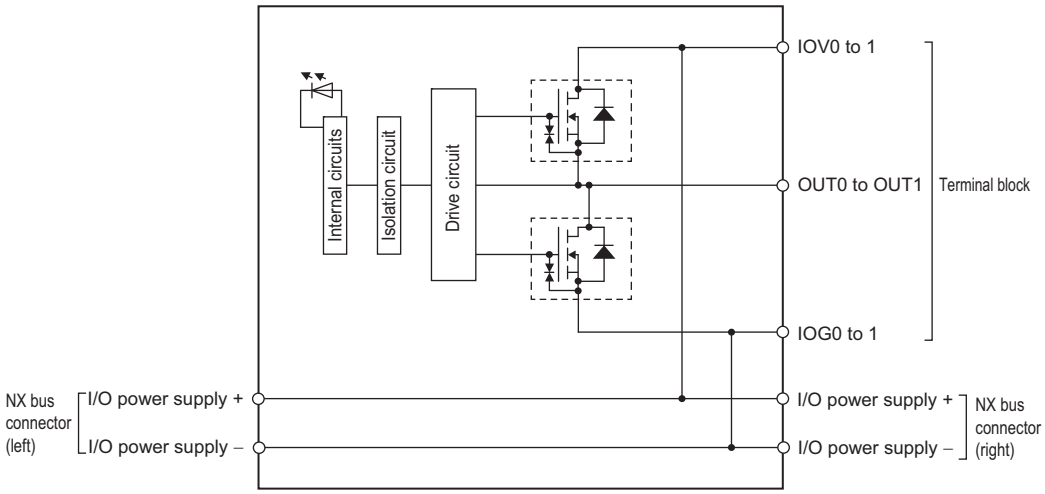 <br><br>This unit uses a push-pull output circuit. | | |
| **Installation orientation and restrictions** | Installation orientation:<br>• Connected to a CPU Unit: Possible in upright installation.<br>• Connected to a Communications Coupler Unit: Possible in 6 orientations.<br>Restrictions: No restrictions | | |
| **Terminal connection diagram** | 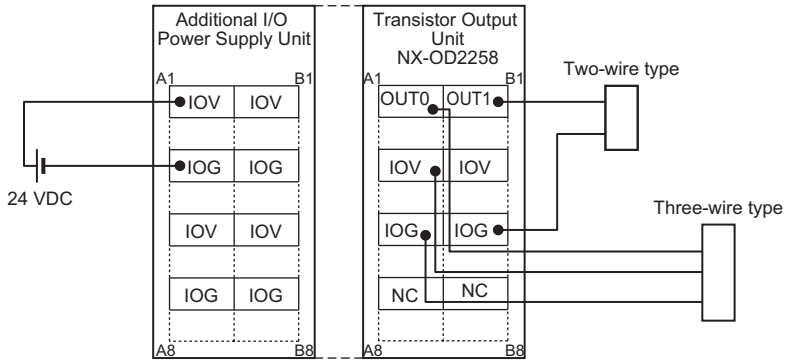 <br> | | |
| **Disconnection/ Short-circuit detection** | Not supported. | **Protective function** | With load short-circuit protection. |

## NX-OD3121

| | | | |
|---|---|---|---|
| **Unit name** | Transistor Output Unit | **Model** | NX-OD3121 |
| **Number of points** | 4 points | **External connection terminals** | Screwless clamping terminal block (12 terminals) |
| **I/O refreshing method** | Selectable Synchronous I/O refreshing or Free-Run refreshing | | |
| **Indicators** | TS indicator, output indicator<br> <br> | **Internal I/O common** | NPN |
| | | **Rated voltage** | 12 to 24 VDC |
| | | **Operating load voltage range** | 10.2 to 28.8 VDC |
| | | **Maximum value of load current** | 0.5 A/point, 2 A/Unit |
| | | **Maximum inrush current** | 4.0 A/point, 10 ms max. |
| | | **Leakage current** | 0.1 mA max. |
| | | **Residual voltage** | 1.5 V max. |
| | | **ON/OFF response time** | 0.1 ms max./0.8 ms max. |
| **Dimensions** | 12 (W) x 100 (H) x 71 (D) | **Isolation method** | Photocoupler isolation |
| **Insulation resistance** | 20 MΩ min. between isolated circuits (at 100 VDC) | **Dielectric strength** | 510 VAC between isolated circuits for 1 minute at a leakage current of 5 mA max. |
| **I/O power supply method** | Supply from the NX bus | **Current capacity of I/O power supply terminal** | IOV: 0.5 A/terminal max.,<br>IOG: 0.5 A/terminal max. |
| **NX Unit power consumption** | • Connected to a CPU Unit or Communication Control Unit<br>0.90 W max.<br>• Connected to a Communications Coupler Unit<br>0.55 W max. | **I/O current consumption** | 10 mA max. |
| **Weight** | 70 g max. | | |
| **Circuit layout** | 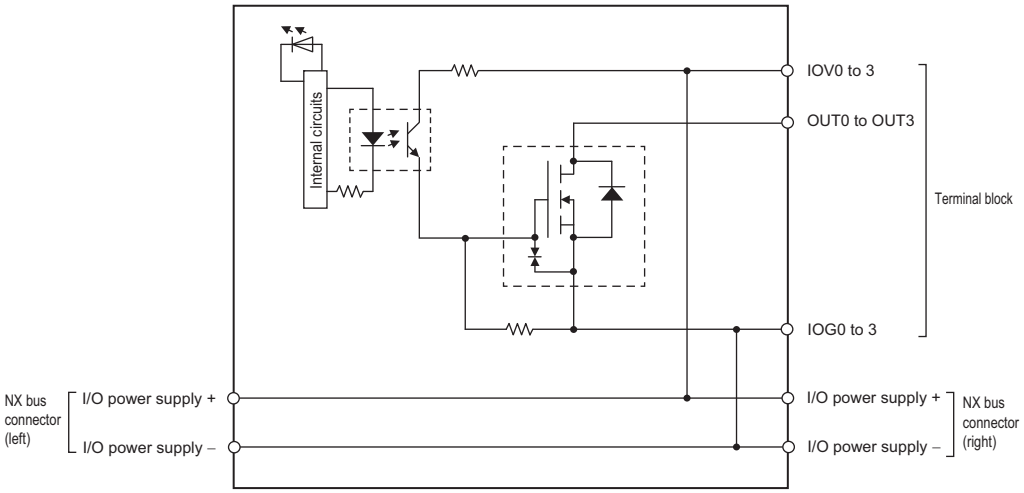 <br> | | |
| **Installation orientation and restrictions** | Installation orientation:<br>• Connected to a CPU Unit or Communication Control Unit: Possible in upright installation.<br>• Connected to a Communications Coupler Unit: Possible in 6 orientations.<br>Restrictions: No restrictions | | |
| **Terminal connection diagram** | 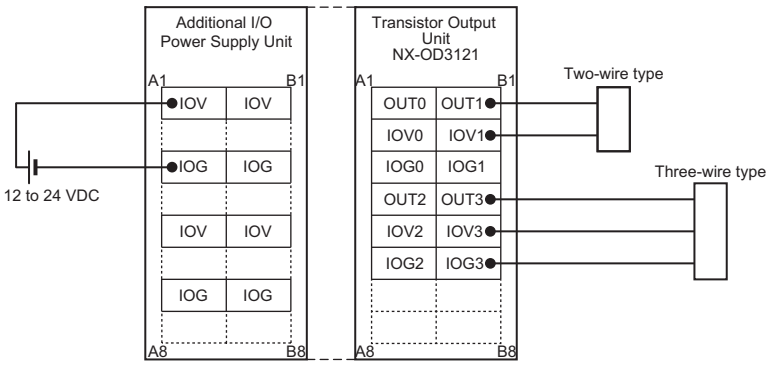 <br> | | |
| **Disconnection/ Short-circuit detection** | Not supported. | **Protective function** | Not supported. |

## NX-OD3153

| | | | |
|---|---|---|---|
| **Unit name** | Transistor Output Unit | **Model** | NX-OD3153 |
| **Number of points** | 4 points | **External connection terminals** | Screwless clamping terminal block (12 terminals) |
| **I/O refreshing method** | Selectable Synchronous I/O refreshing or Free-Run refreshing | | |
| **Indicators** | TS indicator, output indicator<br> <br> | **Internal I/O common** | NPN |
| | | **Rated voltage** | 24 VDC |
| | | **Operating load voltage range** | 15 to 28.8 VDC |
| | | **Maximum value of load current** | 0.5 A/point, 2 A/Unit |
| | | **Maximum inrush current** | 4.0 A/point, 10 ms max. |
| | | **Leakage current** | 0.1 mA max. |
| | | **Residual voltage** | 1.5 V max. |
| | | **ON/OFF response time** | 300 ns max./300 ns max. |
| **Dimensions** | 12 (W) x 100 (H) x 71 (D) | **Isolation method** | Digital isolator isolation |
| **Insulation resistance** | 20 MΩ min. between isolated circuits (at 100 VDC) | **Dielectric strength** | 510 VAC between isolated circuits for 1 minute at a leakage current of 5 mA max. |
| **I/O power supply method** | Supply from the NX bus | **Current capacity of I/O power supply terminal** | IOV: 0.5 A/terminal max.,<br>IOG: 0.5 A/terminal max. |
| **NX Unit power consumption** | • Connected to a CPU Unit or Communication Control Unit<br>0.90 W max.<br>• Connected to a Communications Coupler Unit<br>0.50 W max. | **I/O current consumption** | 30 mA max. |
| **Weight** | 70 g max. | | |
| **Circuit layout** | 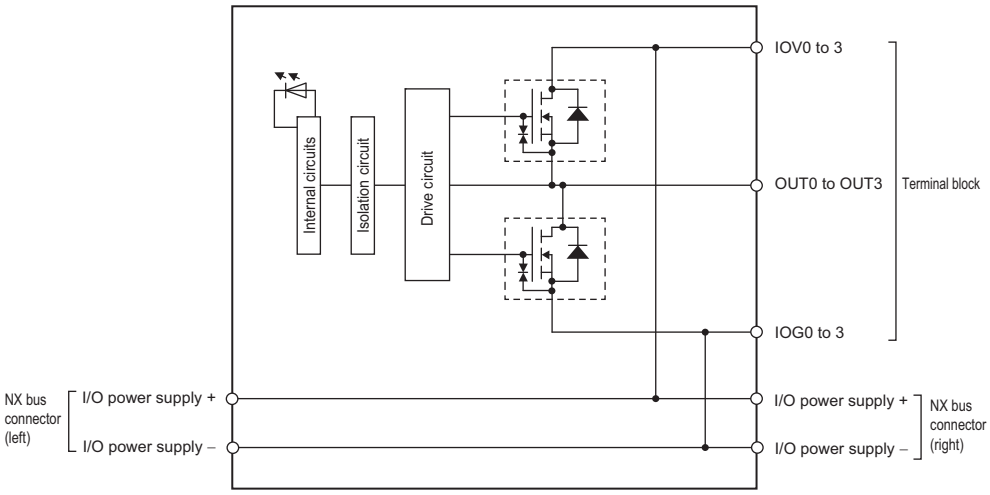 <br><br>This unit uses a push-pull output circuit. | | |
| **Installation orientation and restrictions** | Installation orientation:<br>• Connected to a CPU Unit or Communication Control Unit: Possible in upright installation.<br>• Connected to a Communications Coupler Unit: Possible in 6 orientations.<br>Restrictions: No restrictions | | |
| **Terminal connection diagram** | 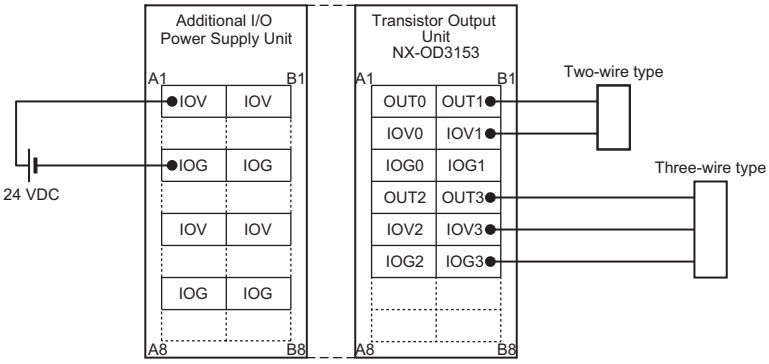 <br> | | |
| **Disconnection/ Short-circuit detection** | Not supported. | **Protective function** | Not supported. |

## NX-OD3256

| | | | |
|---|---|---|---|
| **Unit name** | Transistor Output Unit | **Model** | NX-OD3256 |
| **Number of points** | 4 points | **External connection terminals** | Screwless clamping terminal block (12 terminals) |
| **I/O refreshing method** | Selectable Synchronous I/O refreshing or Free-Run refreshing | | |
| **Indicators** | TS indicator, output indicator<br> <br> | **Internal I/O common** | PNP |
| | | **Rated voltage** | 24 VDC |
| | | **Operating load voltage range** | 15 to 28.8 VDC |
| | | **Maximum value of load current** | 0.5 A/point, 2 A/Unit |
| | | **Maximum inrush current** | 4.0 A/point, 10 ms max. |
| | | **Leakage current** | 0.1 mA max. |
| | | **Residual voltage** | 1.5 V max. |
| | | **ON/OFF response time** | 0.5 ms max./1.0 ms max. |
| **Dimensions** | 12 (W) x 100 (H) x 71 (D) | **Isolation method** | Photocoupler isolation |
| **Insulation resistance** | 20 MΩ min. between isolated circuits (at 100 VDC) | **Dielectric strength** | 510 VAC between isolated circuits for 1 minute at a leakage current of 5 mA max. |
| **I/O power supply method** | Supply from the NX bus | **Current capacity of I/O power supply terminal** | IOV: 0.5 A/terminal max.,<br>IOG: 0.5 A/terminal max. |
| **NX Unit power consumption** | • Connected to a CPU Unit or Communication Control Unit<br>0.90 W max.<br>• Connected to a Communications Coupler Unit<br>0.55 W max. | **I/O current consumption** | 20 mA max. |
| **Weight** | 70 g max. | | |
| **Circuit layout** | 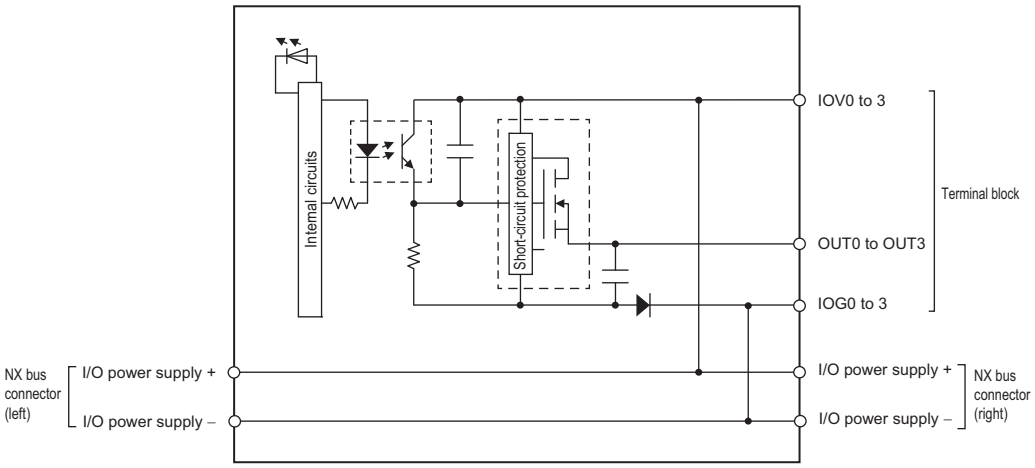 <br> | | |
| **Installation orientation and restrictions** | Installation orientation:<br>• Connected to a CPU Unit or Communication Control Unit: Possible in upright installation.<br>• Connected to a Communications Coupler Unit: Possible in 6 orientations.<br>Restrictions: No restrictions | | |
| **Terminal connection diagram** | 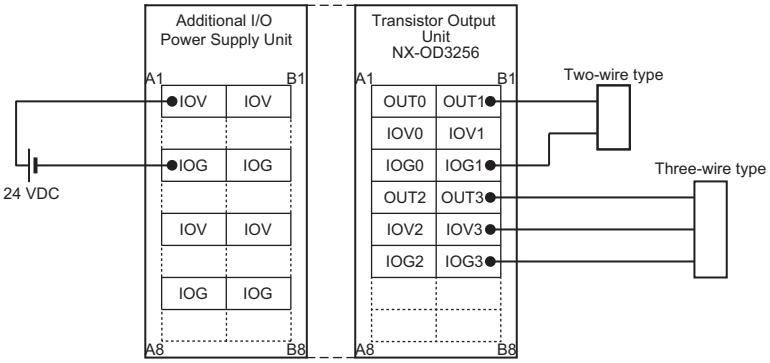 <br> | | |
| **Disconnection/ Short-circuit detection** | Not supported. | **Protective function** | With load short-circuit protection. |

## NX-OD3257

| | | | |
|---|---|---|---|
| **Unit name** | Transistor Output Unit | **Model** | NX-OD3257 |
| **Number of points** | 4 points | **External connection terminals** | Screwless clamping terminal block (12 terminals) |
| **I/O refreshing method** | Selectable Synchronous I/O refreshing or Free-Run refreshing | | |
| **Indicators** | TS indicator, output indicator<br> <br> | **Internal I/O common** | PNP |
| | | **Rated voltage** | 24 VDC |
| | | **Operating load voltage range** | 15 to 28.8 VDC |
| | | **Maximum value of load current** | 0.5 A/point, 2 A/Unit |
| | | **Maximum inrush current** | 4.0 A/point, 10 ms max. |
| | | **Leakage current** | 0.1 mA max. |
| | | **Residual voltage** | 1.5 V max. |
| | | **ON/OFF response time** | 300 ns max./300 ns max. |
| **Dimensions** | 12 (W) x 100 (H) x 71 (D) | **Isolation method** | Digital isolator isolation |
| **Insulation resistance** | 20 MΩ min. between isolated circuits (at 100 VDC) | **Dielectric strength** | 510 VAC between isolated circuits for 1 minute at a leakage current of 5 mA max. |
| **I/O power supply method** | Supply from the NX bus | **Current capacity of I/O power supply terminal** | IOV: 0.5 A/terminal max.,<br>IOG: 0.5 A/terminal max. |
| **NX Unit power consumption** | • Connected to a CPU Unit or Communication Control Unit<br>0.85 W max.<br>• Connected to a Communications Coupler Unit<br>0.50 W max. | **I/O current consumption** | 40 mA max. |
| **Weight** | 70 g max. | | |
| **Circuit layout** | 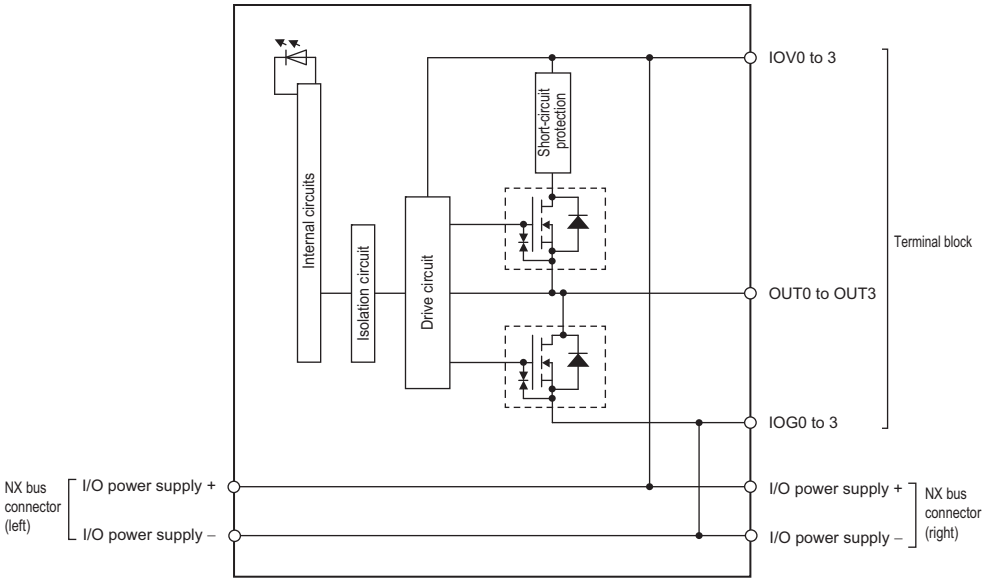 <br><br>This unit uses a push-pull output circuit. | | |
| **Installation orientation and restrictions** | Installation orientation:<br>• Connected to a CPU Unit or Communication Control Unit: Possible in upright installation.<br>• Connected to a Communications Coupler Unit: Possible in 6 orientations.<br>Restrictions: No restrictions | | |
| **Terminal connection diagram** | 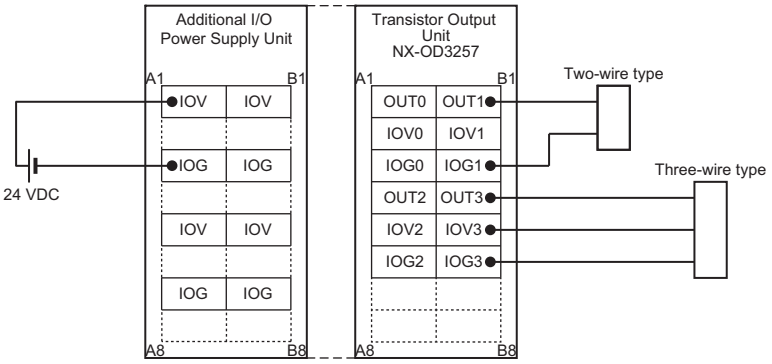 <br> | | |
| **Disconnection/ Short-circuit detection** | Not supported. | **Protective function** | With load short-circuit protection. |

## NX-OD3268

| | | | |
|---|---|---|---|
| **Unit name** | Transistor Output Unit | **Model** | NX-OD3268 |
| **Number of points** | 4 points | **External connection terminals** | Screwless clamping terminal block (16 terminals) |
| **I/O refreshing method** | Switching Synchronous I/O refreshing and Free-Run refreshing | | |
| **Indicators** | TS indicator, output indicator<br> <br> | **Internal I/O common** | PNP |
| | | **Rated voltage** | 24 VDC |
| | | **Operating load voltage range** | 15 to 28.8 VDC |
| | | **Maximum value of load current** | 2 A/point, 8 A/Unit |
| | | **Maximum inrush current** | 4.0 A/point, 10 ms max. |
| | | **Leakage current** | 0.1 mA max. |
| | | **Residual voltage** | 1.5 V max. |
| | | **ON/OFF response time** | 0.5 ms max./1.0 ms max. |
| **Dimensions** | 12 (W) x 100 (H) x 71 (D) | **Isolation method** | Photocoupler isolation |
| **Insulation resistance** | 20 MΩ min. between isolated circuits (at 100 VDC) | **Dielectric strength** | 510 VAC between isolated circuits for 1 minute at a leakage current of 5 mA max. |
| **I/O power supply method** | Supply from external source | **Current capacity of I/O power supply terminal** | IOV: 2 A/terminal max.,<br>IOG: 2 A/terminal max.,<br>COM (+V): 4 A/terminal max.,<br>0V: 4 A/terminal max. |
| **NX Unit power consumption** | • Connected to a CPU Unit or Communication Control Unit<br>0.85 W max.<br>• Connected to a Communications Coupler Unit<br>0.50 W max. | **Current consumption from I/O power supply** | 20 mA max. |
| **Weight** | 70 g max. | | |
| **Circuit layout** | 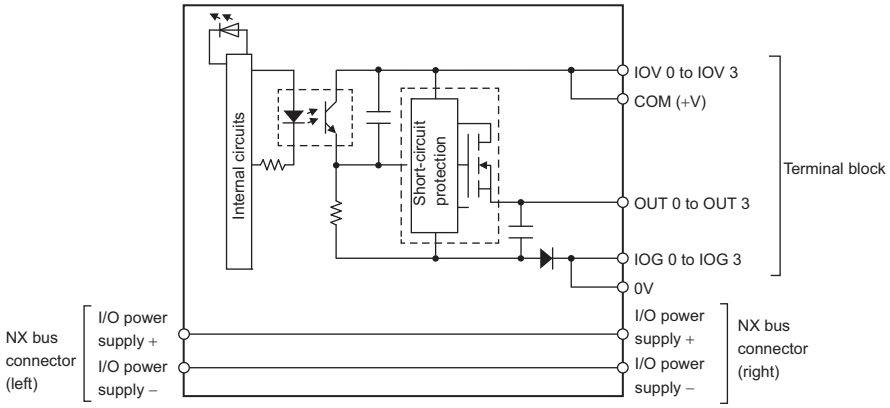 <br> | | |
| **Installation orientation and restrictions** | Installation orientation:<br>• Connected to a CPU Unit or Communication Control Unit: Possible in upright installation.<br>• Connected to a Communications Coupler Unit: Possible in 6 orientations.<br>Restrictions: No restrictions | | |
| **Terminal connection diagram** | 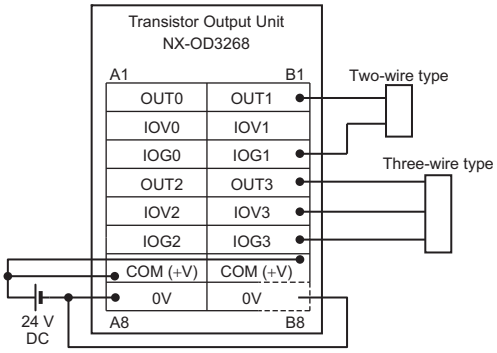 <br><br>• 0V has 2 terminals, so be sure to wire both terminals.<br>• COM (+V) has 2 terminals, so be sure to wire both terminals. | | |
| **Disconnection/ Short-circuit detection** | Not supported. | **Protective function** | With load short-circuit protection. |

## NX-OD4121

| | | | |
|---|---|---|---|
| **Unit name** | Transistor Output Unit | **Model** | NX-OD4121 |
| **Number of points** | 8 points | **External connection terminals** | Screwless clamping terminal block (16 terminals) |
| **I/O refreshing method** | Selectable Synchronous I/O refreshing or Free-Run refreshing | | |
| **Indicators** | TS indicator, output indicator<br> <br> | **Internal I/O common** | NPN |
| | | **Rated voltage** | 12 to 24 VDC |
| | | **Operating load voltage range** | 10.2 to 28.8 VDC |
| | | **Maximum value of load current** | 0.5 A/point, 4 A/Unit |
| | | **Maximum inrush current** | 4.0 A/point, 10 ms max. |
| | | **Leakage current** | 0.1 mA |
| | | **Residual voltage** | 1.5 V max. |
| | | **ON/OFF response time** | 0.1 ms max./0.8 ms max. |
| **Dimensions** | 12 (W) x 100 (H) x 71 (D) | **Isolation method** | Photocoupler isolation |
| **Insulation resistance** | 20 MΩ min. between isolated circuits (at 100 VDC) | **Dielectric strength** | 510 VAC between isolated circuits for 1 minute at a leakage current of 5 mA max. |
| **I/O power supply method** | Supply from the NX bus | **Current capacity of I/O power supply terminal** | IOV: 0.5 A/terminal max. |
| **NX Unit power consumption** | • Connected to a CPU Unit or Communication Control Unit<br>0.90 W max.<br>• Connected to a Communications Coupler Unit<br>0.55 W max. | **I/O current consumption** | 10 mA max. |
| **Weight** | 70 g max. | | |
| **Circuit layout** | 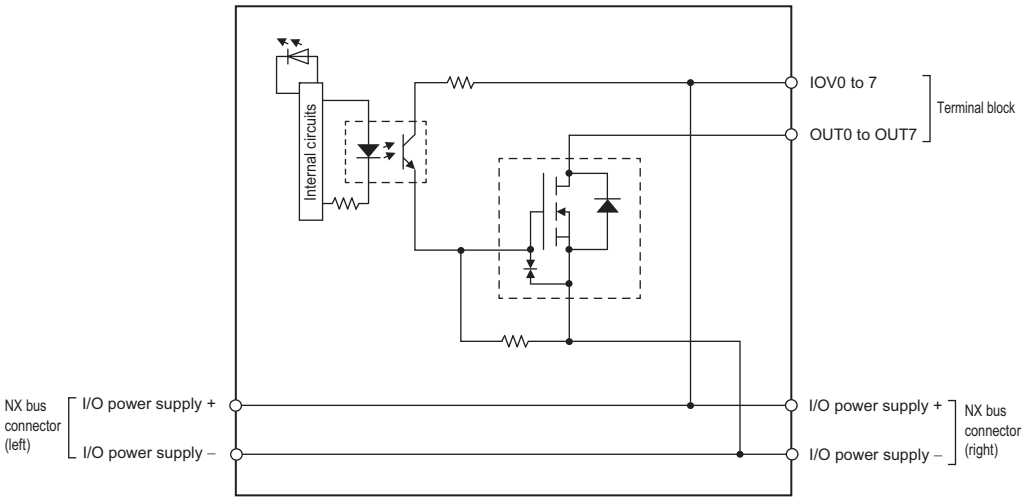 <br> | | |
| **Installation orientation and restrictions** | Installation orientation:<br>• Connected to a CPU Unit or Communication Control Unit: Possible in upright installation.<br>• Connected to a Communications Coupler Unit: Possible in 6 orientations.<br>Restrictions: No restrictions | | |
| **Terminal connection diagram** | 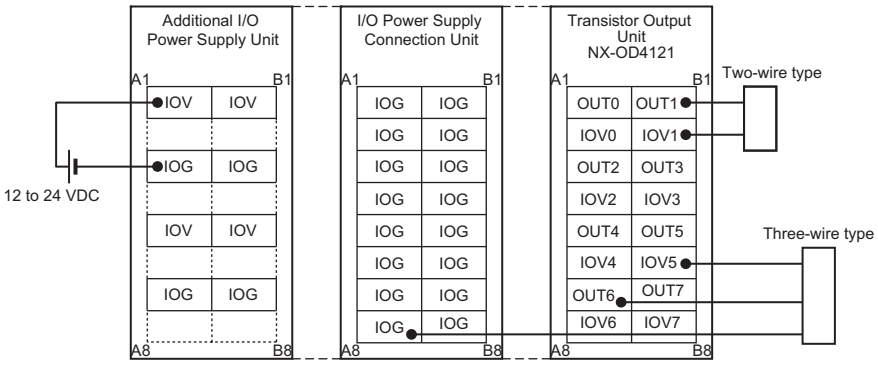 <br> | | |
| **Disconnection/ Short-circuit detection** | Not supported. | **Protective function** | Not supported. |

## NX-OD4256

| | | | |
|---|---|---|---|
| **Unit name** | Transistor Output Unit | **Model** | NX-OD4256 |
| **Number of points** | 8 points | **External connection terminals** | Screwless clamping terminal block (16 terminals) |
| **I/O refreshing method** | Selectable Synchronous I/O refreshing or Free-Run refreshing | | |
| **Indicators** | TS indicator, output indicator<br> <br> | **Internal I/O common** | PNP |
| | | **Rated voltage** | 24 VDC |
| | | **Operating load voltage range** | 15 to 28.8 VDC |
| | | **Maximum value of load current** | 0.5 A/point, 4 A/Unit |
| | | **Maximum inrush current** | 4.0 A/point, 10 ms max. |
| | | **Leakage current** | 0.1 mA |
| | | **Residual voltage** | 1.5 V max. |
| | | **ON/OFF response time** | 0.5 ms max./1.0 ms max. |
| **Dimensions** | 12 (W) x 100 (H) x 71 (D) | **Isolation method** | Photocoupler isolation |
| **Insulation resistance** | 20 MΩ min. between isolated circuits (at 100 VDC) | **Dielectric strength** | 510 VAC between isolated circuits for 1 minute at a leakage current of 5 mA max. |
| **I/O power supply method** | Supply from the NX bus | **Current capacity of I/O power supply terminal** | IOG: 0.5 A/terminal max. |
| **NX Unit power consumption** | • Connected to a CPU Unit or Communication Control Unit 1.00 W max.<br>• Connected to a Communications Coupler Unit 0.65 W max. | **I/O current consumption** | 30 mA max. |
| **Weight** | 70 g max. | | |
| **Circuit layout** | 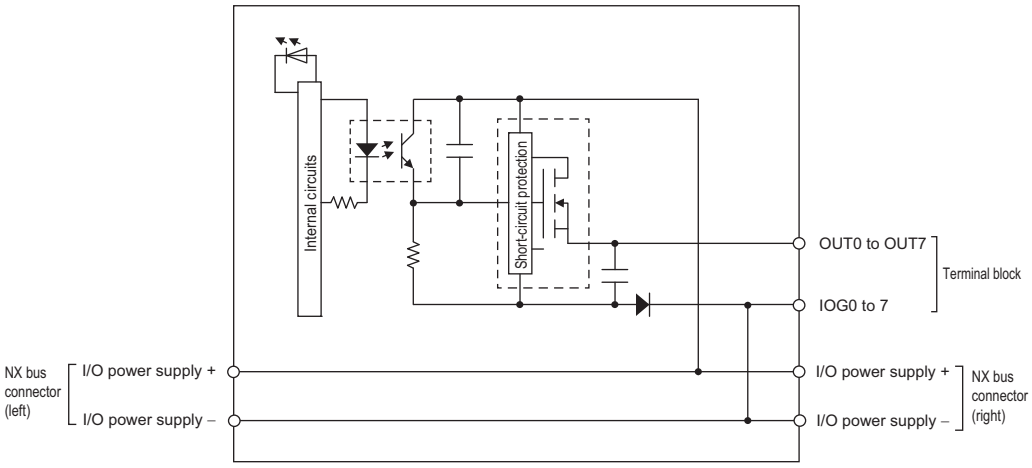 <br> | | |
| **Installation orientation and restrictions** | Installation orientation:<br>• Connected to a CPU Unit or Communication Control Unit: Possible in upright installation.<br>• Connected to a Communications Coupler Unit: Possible in 6 orientations.<br>Restrictions: No restrictions | | |
| **Terminal connection diagram** | 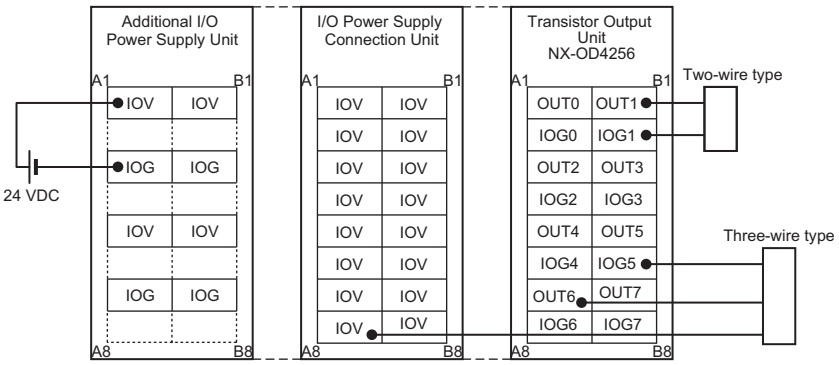 <br> | | |
| **Disconnection/ Short-circuit detection** | Not supported. | **Protective function** | With load short-circuit protection. |

## NX-OD5121

| | | | |
|---|---|---|---|
| **Unit name** | Transistor Output Unit | **Model** | NX-OD5121 |
| **Number of points** | 16 points | **External connection terminals** | Screwless clamping terminal block (16 terminals) |
| **I/O refreshing method** | Selectable Synchronous I/O refreshing or Free-Run refreshing | | |
| **Indicators** | TS indicator, output indicator<br> <br> | **Internal I/O common** | NPN |
| | | **Rated voltage** | 12 to 24 VDC |
| | | **Operating load voltage range** | 10.2 to 28.8 VDC |
| | | **Maximum value of load current** | 0.5 A/point, 4 A/Unit |
| | | **Maximum inrush current** | 4.0 A/point, 10 ms max. |
| | | **Leakage current** | 0.1 mA max. |
| | | **Residual voltage** | 1.5 V max. |
| | | **ON/OFF response time** | 0.1 ms max./0.8 ms max. |
| **Dimensions** | 12 (W) x 100 (H) x 71 (D) | **Isolation method** | Photocoupler isolation |
| **Insulation resistance** | 20 MΩ min. between isolated circuits (at 100 VDC) | **Dielectric strength** | 510 VAC between isolated circuits for 1 minute at a leakage current of 5 mA max. |
| **I/O power supply method** | Supply from the NX bus | **Current capacity of I/O power supply terminal** | Without I/O power supply terminals |
| **NX Unit power consumption** | • Connected to a CPU Unit or Communication Control Unit<br>1.00 W max.<br>• Connected to a Communications Coupler Unit<br>0.65 W max. | **I/O current consumption** | 20 mA max. |
| **Weight** | 70 g max. | | |
| **Circuit layout** | 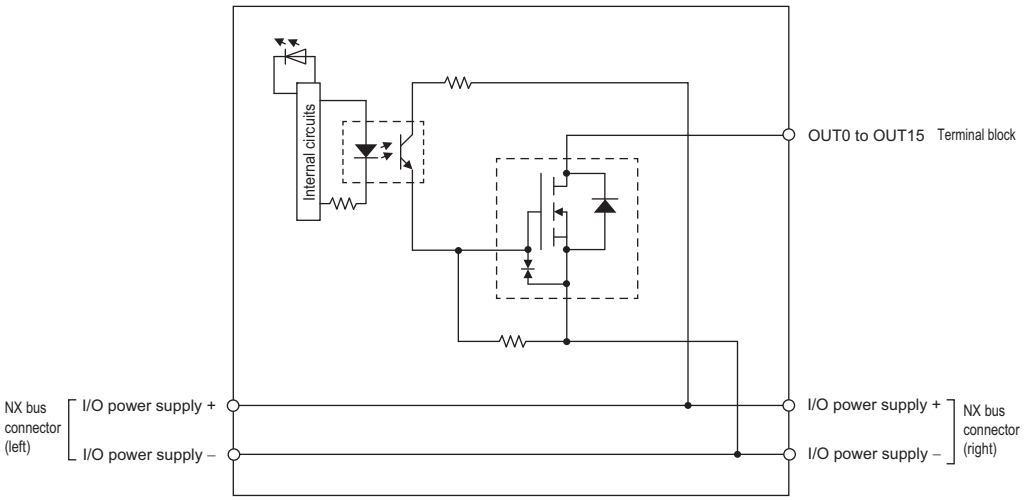 <br> | | |
| **Installation orientation and restrictions** | Installation orientation:<br>• Connected to a CPU Unit or Communication Control Unit: Possible in upright installation.<br>• Connected to a Communications Coupler Unit: Possible in 6 orientations.<br>Restrictions: No restrictions | | |
| **Terminal connection diagram** | 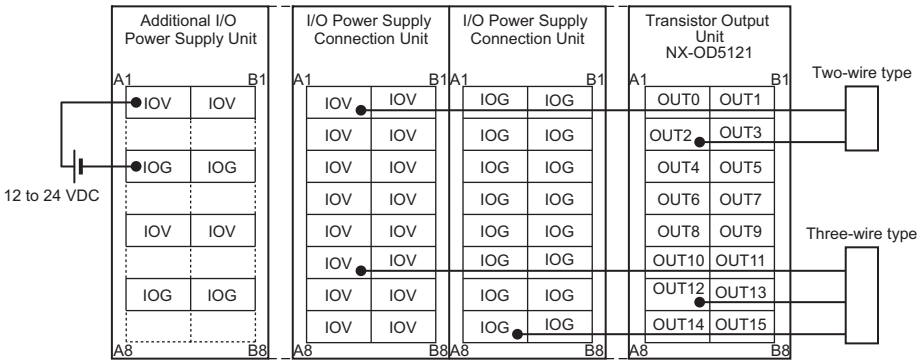 <br> | | |
| **Disconnection/ Short-circuit detection** | Not supported. | **Protective function** | Not supported. |

## NX-OD5256

| | | | |
|---|---|---|---|
| **Unit name** | Transistor Output Unit | **Model** | NX-OD5256 |
| **Number of points** | 16 points | **External connection terminals** | Screwless clamping terminal block (16 terminals) |
| **I/O refreshing method** | Selectable Synchronous I/O refreshing or Free-Run refreshing | | |
| **Indicators** | TS indicator, output indicator<br> <br> | **Internal I/O common** | PNP |
| | | **Rated voltage** | 24 VDC |
| | | **Operating load voltage range** | 15 to 28.8 VDC |
| | | **Maximum value of load current** | 0.5 A/point, 4 A/Unit |
| | | **Maximum inrush current** | 4.0 A/point, 10 ms max. |
| | | **Leakage current** | 0.1 mA max. |
| | | **Residual voltage** | 1.5 V max. |
| | | **ON/OFF response time** | 0.5 ms max./1.0 ms max. |
| **Dimensions** | 12 (W) x 100 (H) x 71 (D) | **Isolation method** | Photocoupler isolation |
| **Insulation resistance** | 20 MΩ min. between isolated circuits (at 100 VDC) | **Dielectric strength** | 510 VAC between isolated circuits for 1 minute at a leakage current of 5 mA max. |
| **I/O power supply method** | Supply from the NX bus | **Current capacity of I/O power supply terminal** | Without I/O power supply terminals |
| **NX Unit power consumption** | • Connected to a CPU Unit or Communication Control Unit<br>1.10 W max.<br>• Connected to a Communications Coupler Unit<br>0.70 W max. | **I/O current consumption** | 40 mA max. |
| **Weight** | 70 g max. | | |
| **Circuit layout** | 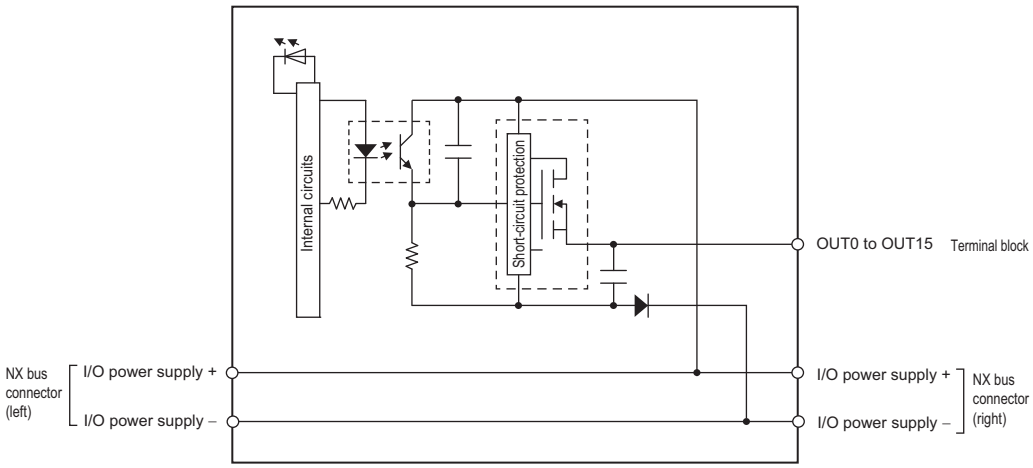 <br> | | |
| **Installation orientation and restrictions** | Installation orientation:<br>• Connected to a CPU Unit or Communication Control Unit: Possible in upright installation.<br>• Connected to a Communications Coupler Unit: Possible in 6 orientations.<br>Restrictions: No restrictions | | |
| **Terminal connection diagram** | 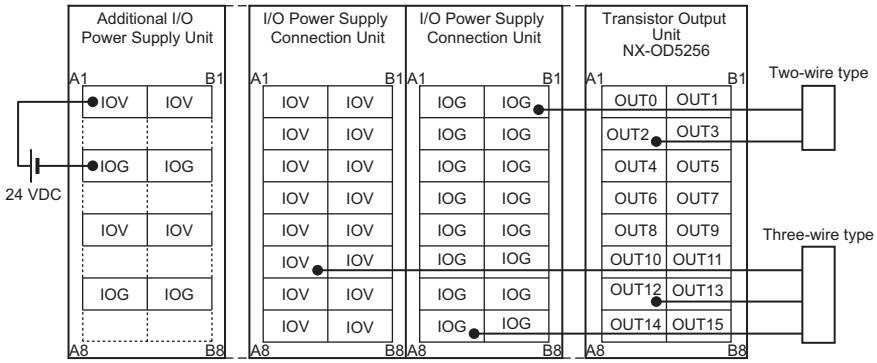 <br> | | |
| **Disconnection/ Short-circuit detection** | Not supported. | **Protective function** | With load short-circuit protection. |

## ● Transistor Output Unit (M3 Screw Terminal Block, 30 mm Width)
## NX-OD5121-1

| | | | |
|---|---|---|---|
| **Unit name** | Transistor Output Unit | **Model** | NX-OD5121-1 |
| **Number of points** | 16 points | **External connection terminals** | M3 screw terminal block (18 terminals) |
| **I/O refreshing method** | Switching Synchronous I/O refreshing and Free-Run refreshing | | |
| **Indicators** | TS indicator, output indicator<br> 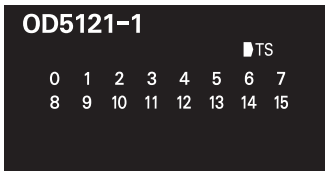 <br> | **Internal I/O common** | NPN |
| | | **Rated voltage** | 12 to 24 VDC |
| | | **Operating load voltage range** | 10.2 to 28.8 VDC |
| | | **Maximum value of load current** | 0.5 A/point, 5 A/Unit |
| | | **Maximum inrush current** | 4.0 A/point, 10 ms max. |
| | | **Leakage current** | 0.1 mA max. |
| | | **Residual voltage** | 1.5 V max. |
| | | **ON/OFF response time** | 0.1 ms max./0.8 ms max. |
| **Dimensions** | 30 (W) x 100 (H) x 71 (D) | **Isolation method** | Photocoupler isolation |
| **Insulation resistance** | 20 MΩ min. between isolated circuits (at 100 VDC) | **Dielectric strength** | 510 VAC between isolated circuits for 1 minute at a leakage current of 5 mA max. |
| **I/O power supply method** | Supply from the external source | **Current capacity of I/O power supply terminal** | Without I/O power supply terminals |
| **NX Unit power consumption** | • Connected to a CPU Unit or Communication Control Unit 0.90 W max.<br>• Connected to a Communications Coupler Unit 0.60 W max. | **Current consumption from I/O power supply** | 30 mA max. |
| **Weight** | 125 g max. | | |
| **Circuit layout** | 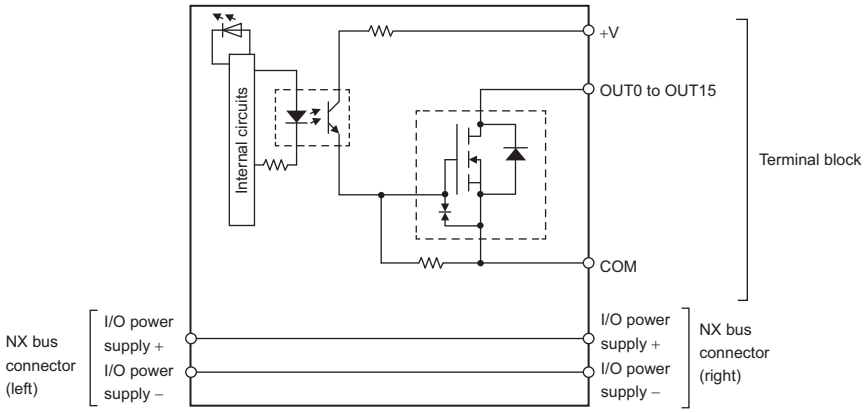 <br> | | |
| **Installation orientation and restrictions** | Installation orientation:<br>• Connected to a CPU Unit or Communication Control Unit: Possible in upright installation.<br>• Connected to a Communications Coupler Unit: Possible in 6 orientations.<br>Restrictions: No restrictions | | |
| **Terminal connection diagram** | 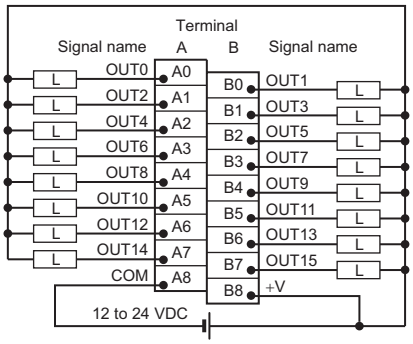 <br> | | |
| **Disconnection/ Short-circuit detection** | Not supported. | **Protective function** | Not supported. |

## NX-OD5256-1

| | | | |
|---|---|---|---|
| **Unit name** | Transistor Output Unit | **Model** | NX-OD5256-1 |
| **Number of points** | 16 points | **External connection terminals** | M3 screw terminal block (18 terminals) |
| **I/O refreshing method** | Switching Synchronous I/O refreshing and Free-Run refreshing | | |
| **Indicators** | TS indicator, output indicator<br> 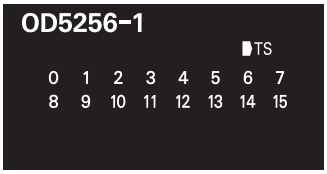 <br> | **Internal I/O common** | PNP |
| | | **Rated voltage** | 24 VDC |
| | | **Operating load voltage range** | 20.4 to 28.8 VDC |
| | | **Maximum value of load current** | 0.5 A/point, 5 A/Unit |
| | | **Maximum inrush current** | 4.0 A/point, 10 ms max. |
| | | **Leakage current** | 0.1 mA max. |
| | | **Residual voltage** | 1.5 V max. |
| | | **ON/OFF response time** | 0.5 ms max./1.0 ms max. |
| **Dimensions** | 30 (W) x 100 (H) x 71 (D) | **Isolation method** | Photocoupler isolation |
| **Insulation resistance** | 20 MΩ min. between isolated circuits (at 100 VDC) | **Dielectric strength** | 510 VAC between isolated circuits for 1 minute at a leakage current of 5 mA max. |
| **I/O power supply method** | Supply from external source | **Current capacity of I/O power supply terminal** | Without I/O power supply terminals |
| **NX Unit power consumption** | • Connected to a CPU Unit or Communication Control Unit 0.95 W max.<br>• Connected to a Communications Coupler Unit 0.65 W max. | **Current consumption from I/O power supply** | 30 mA max. |
| **Weight** | 125 g max. | | |
| **Circuit layout** | 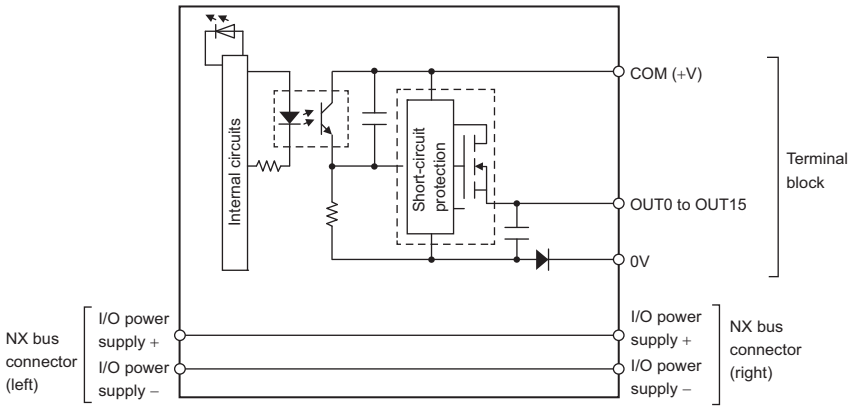 <br> | | |
| **Installation orientation and restrictions** | Installation orientation:<br>• Connected to a CPU Unit or Communication Control Unit: Possible in upright installation.<br>• Connected to a Communications Coupler Unit: Possible in 6 orientations.<br>Restrictions: No restrictions | | |
| **Terminal connection diagram** | 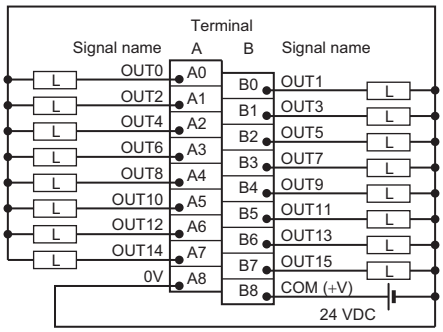 <br> | | |
| **Disconnection/ Short-circuit detection** | Not supported. | **Protective function** | With load short-circuit protection. |

## ● Transistor Output Unit (MIL Connector, 30 mm Width)
## NX-OD5121-5

| | | | |
|---|---|---|---|
| **Unit name** | Transistor Output Unit | **Model** | NX-OD5121-5 |
| **Number of points** | 16 points | **External connection terminals** | MIL connector (20 terminals) |
| **I/O refreshing method** | Switching Synchronous I/O refreshing and Free-Run refreshing | | |
| **Indicators** | TS indicator, output indicator<br> 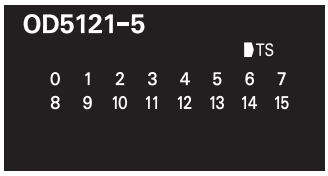 <br> | **Internal I/O common** | NPN |
| | | **Rated voltage** | 12 to 24 VDC |
| | | **Operating load voltage range** | 10.2 to 28.8 VDC |
| | | **Maximum value of load current** | 0.5 A/point, 2 A/Unit |
| | | **Maximum inrush current** | 4.0 A/point, 10 ms max. |
| | | **Leakage current** | 0.1 mA max. |
| | | **Residual voltage** | 1.5 V max. |
| | | **ON/OFF response time** | 0.1 ms max./0.8 ms max. |
| **Dimensions** | 30 (W) x 100 (H) x 71 (D) | **Isolation method** | Photocoupler isolation |
| **Insulation resistance** | 20 MΩ min. between isolated circuits (at 100 VDC) | **Dielectric strength** | 510 VAC between isolated circuits for 1 minute at a leakage current of 5 mA max. |
| **I/O power supply method** | Supply from external source | **Current capacity of I/O power supply terminal** | Without I/O power supply terminals |
| **NX Unit power consumption** | • Connected to a CPU Unit or Communication Control Unit 0.95 W max.<br>• Connected to a Communications Coupler Unit 0.60 W max. | **Current consumption from I/O power supply** | 30 mA max. |
| **Weight** | 80 g max. | | |
| **Circuit layout** | 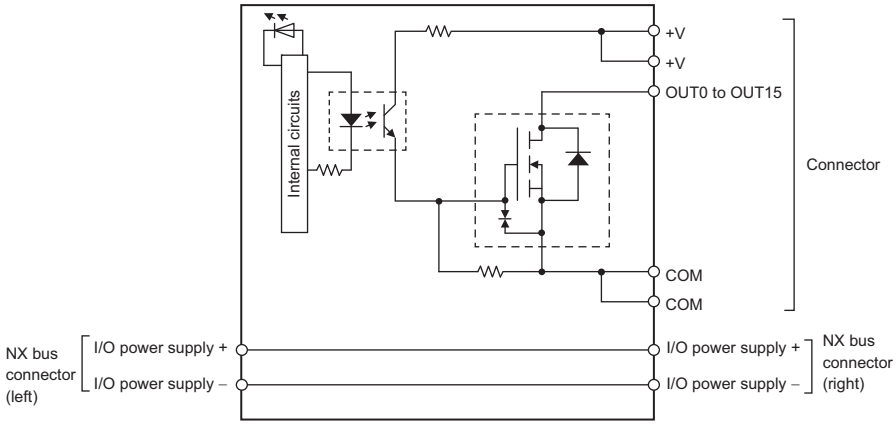 <br> | | |
| **Installation orientation and restrictions** | Installation orientation:<br>• Connected to a CPU Unit or Communication Control Unit: Possible in upright installation.<br>• Connected to a Communications Coupler Unit: Possible in 6 orientations.<br>Restrictions: No restrictions | | |
| **Terminal connection diagram** | 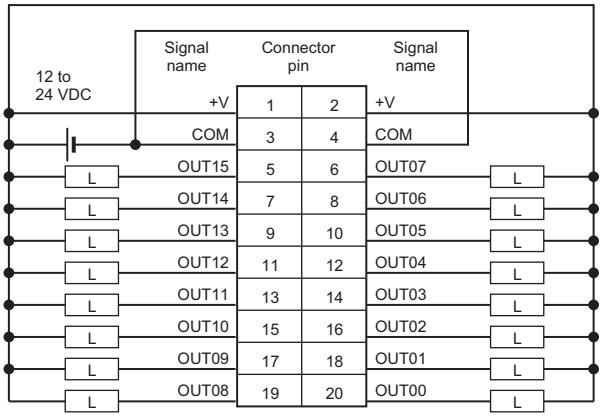 <br><br>• Be sure to wire both pins 3 and 4 (COM).<br>• Be sure to wire both pins 1 and 2 (+V). | | |
| **Disconnection/Short-circuit detection** | Not supported. | **Protective function** | Not supported. |

## NX-OD5256-5

| | | | |
|---|---|---|---|
| **Unit name** | Transistor Output Unit | **Model** | NX-OD5256-5 |
| **Number of points** | 16 points | **External connection terminals** | MIL connector (20 terminals) |
| **I/O refreshing method** | Switching Synchronous I/O refreshing and Free-Run refreshing | | |
| **Indicators** | TS indicator, output indicator<br> 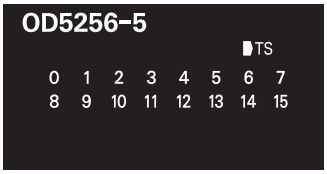 <br> | **Internal I/O common** | PNP |
| | | **Rated voltage** | 24 VDC |
| | | **Operating load voltage range** | 20.4 to 28.8 VDC |
| | | **Maximum value of load current** | 0.5 A/point, 2 A/Unit |
| | | **Maximum inrush current** | 4.0 A/point, 10 ms max. |
| | | **Leakage current** | 0.1 mA max. |
| | | **Residual voltage** | 1.5 V max. |
| | | **ON/OFF response time** | 0.5 ms max./1.0 ms max. |
| **Dimensions** | 30 (W) x 100 (H) x 71 (D) | **Isolation method** | Photocoupler isolation |
| **Insulation resistance** | 20 MΩ min. between isolated circuits (at 100 VDC) | **Dielectric strength** | 510 VAC between isolated circuits for 1 minute at a leakage current of 5 mA max. |
| **I/O power supply method** | Supplied from external source. | **Current capacity of I/O power supply terminal** | Without I/O power supply terminals |
| **NX Unit power consumption** | • Connected to a CPU Unit or Communication Control Unit<br>1.00 W max.<br>• Connected to a Communications Coupler Unit<br>0.70 W max. | **Current consumption from I/O power supply** | 40 mA max. |
| **Weight** | 85 g max. | | |
| **Circuit layout** | 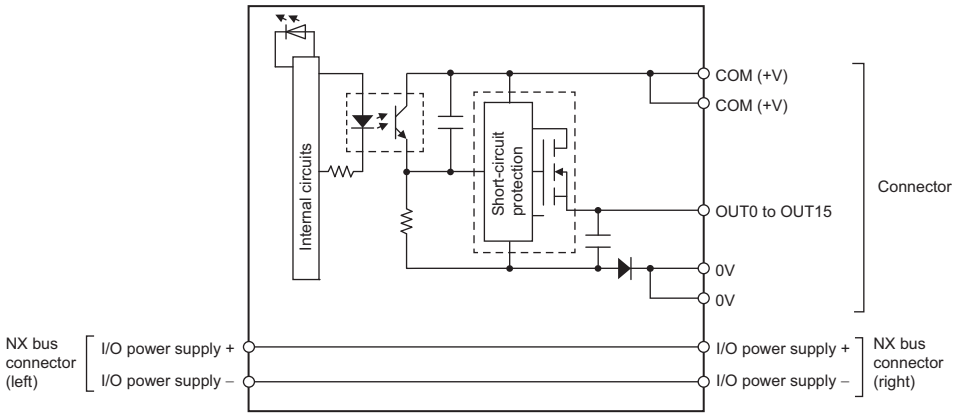 <br> | | |
| **Installation orientation and restrictions** | Installation orientation:<br>• Connected to a CPU Unit or Communication Control Unit: Possible in upright installation.<br>• Connected to a Communications Coupler Unit: Possible in 6 orientations.<br>Restrictions: No restrictions | | |
| **Terminal connection diagram** | 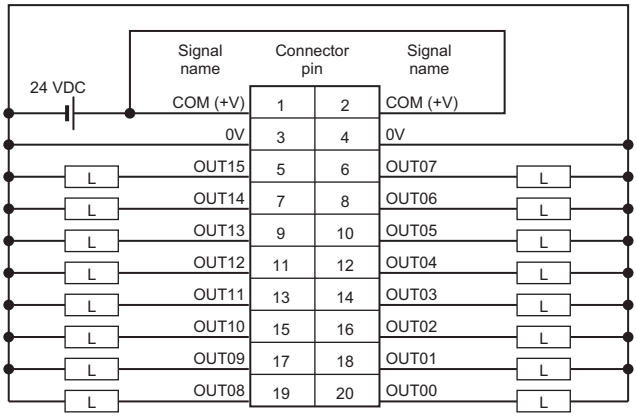 <br><br>• Be sure to wire both pins 1 and 2 (COM (+V)).<br>• Be sure to wire both pins 3 and 4 (0V). | | |
| **Disconnection/Short-circuit detection** | Not supported. | **Protective function** | With load short-circuit protection. |

## NX-OD6121-5

| | | | |
|---|---|---|---|
| **Unit name** | Transistor Output Unit | **Model** | NX-OD6121-5 |
| **Number of points** | 32 points | **External connection terminals** | MIL connector (40 terminals) |
| **I/O refreshing method** | Switching Synchronous I/O refreshing and Free-Run refreshing | | |
| **Indicators** | TS indicator, output indicator<br>OD6121-5 TS<br>0 1 2 3 4 5 6 7<br>8 9 10 11 12 13 14 15<br>16 17 18 19 20 21 22 23<br>24 25 26 27 28 29 30 31 | **Internal I/O common** | NPN |
| | | **Rated voltage** | 12 to 24 VDC |
| | | **Operating load voltage range** | 10.2 to 28.8 VDC |
| | | **Maximum value of load current** | 0.5 A/point, 2 A/common, 4 A/Unit |
| | | **Maximum inrush current** | 4.0 A/point, 10 ms max. |
| | | **Leakage current** | 0.1 mA max. |
| | | **Residual voltage** | 1.5 V max. |
| | | **ON/OFF response time** | 0.1 ms max./0.8 ms max. |
| **Dimensions** | 30 (W) x 100 (H) x 71 (D) | **Isolation method** | Photocoupler isolation |
| **Insulation resistance** | 20 MΩ min. between isolated circuits (at 100 VDC) | **Dielectric strength** | 510 VAC between isolated circuits for 1 minute at a leakage current of 5 mA max. |
| **I/O power supply method** | Supply from external source | **Current capacity of I/O power supply terminal** | Without I/O power supply terminals |
| **NX Unit power consumption** | • Connected to a CPU Unit or Communication Control Unit 1.00 W max.<br>• Connected to a Communications Coupler Unit 0.80 W max. | **Current consumption from I/O power supply** | 50 mA max. |
| **Weight** | 90 g max. | | |
| **Circuit layout** | 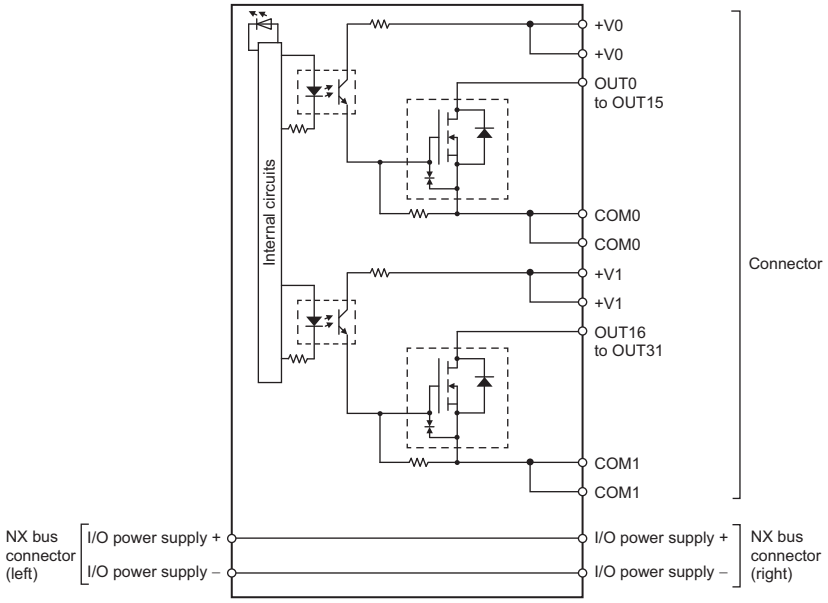 | | |
| **Installation orientation and restrictions** | Installation orientation:<br>• Connected to a CPU Unit or Communication Control Unit: Possible in upright installation.<br>• Connected to a Communications Coupler Unit: Possible in 6 orientations.<br>Restrictions: No restrictions | | |

| | | | |
|---|---|---|---|
| **Terminal connection diagram** | 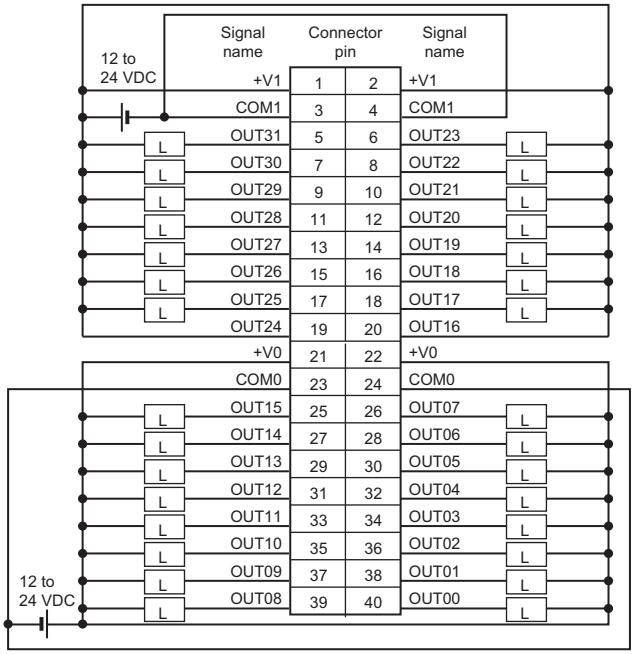 <br>• Be sure to wire both pins 21 and 22 (+V0).<br>• Be sure to wire both pins 23 and 24 (COM0).<br>• Be sure to wire both pins 1 and 2 (+V1).<br>• Be sure to wire both pins 3 and 4 (COM1). | | |
| **Disconnection/Short-circuit detection** | Not supported. | **Protective function** | Not supported. |

## NX-OD6256-5

| | | | |
|---|---|---|---|
| **Unit name** | Transistor Output Unit | **Model** | NX-OD6256-5 |
| **Number of points** | 32 points | **External connection terminals** | MIL connector (40 terminals) |
| **I/O refreshing method** | Switching Synchronous I/O refreshing and Free-Run refreshing | | |
| **Indicators** | TS indicator, output indicator<br> 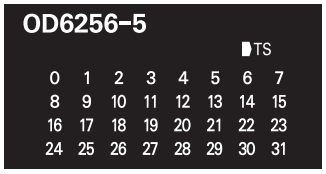 <br> | **Internal I/O common** | PNP |
| | | **Rated voltage** | 24 VDC |
| | | **Operating load voltage range** | 20.4 to 28.8 VDC |
| | | **Maximum value of load current** | 0.5 A/point, 2 A/common, 4 A/Unit |
| | | **Maximum inrush current** | 4.0 A/point, 10 ms max. |
| | | **Leakage current** | 0.1 mA max. |
| | | **Residual voltage** | 1.5 V max. |
| | | **ON/OFF response time** | 0.5 ms max./1.0 ms max. |
| **Dimensions** | 30 (W) x 100 (H) x 71 (D) | **Isolation method** | Photocoupler isolation |
| **Insulation resistance** | 20 MΩ min. between isolated circuits (at 100 VDC) | **Dielectric strength** | 510 VAC between isolated circuits for 1 minute at a leakage current of 5 mA max. |
| **I/O power supply method** | Supply from external source | **Current capacity of I/O power supply terminal** | Without I/O power supply terminals |
| **NX Unit power consumption** | • Connected to a CPU Unit or Communication Control Unit<br>1.30 W max.<br>• Connected to a Communications Coupler Unit<br>1.00 W max. | **Current consumption from I/O power supply** | 80 mA max. |
| **Weight** | 95 g max. | | |
| **Circuit layout** | 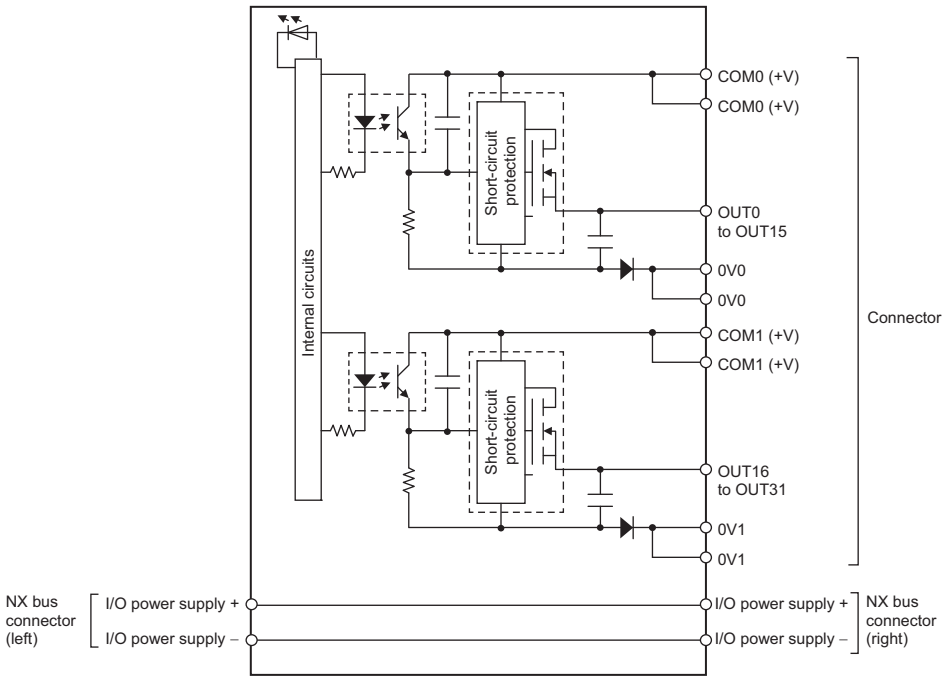 <br> | | |
| **Installation orientation and restrictions** | Installation orientation:<br>• Connected to a CPU Unit or Communication Control Unit: Possible in upright installation.<br>• Connected to a Communications Coupler Unit: Possible in 6 orientations.<br>Restrictions: No restrictions | | |

| | | | |
|---|---|---|---|
| **Terminal connection diagram** | 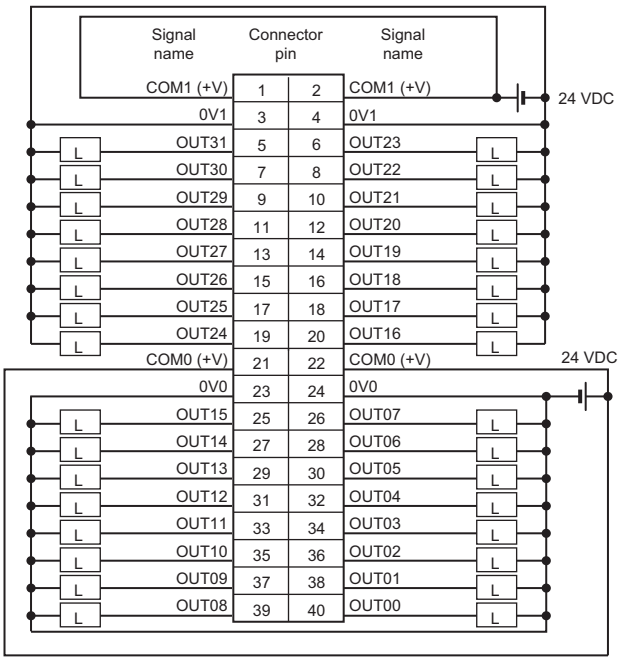 <br>• Be sure to wire both pins 21 and 22 (COM0 (+V)).<br>• Be sure to wire both pins 1 and 2 (COM1 (+V)).<br>• Be sure to wire both pins 23 and 24 (0V0).<br>• Be sure to wire both pins 3 and 4 (0V1). | | |
| **Disconnection/Short-circuit detection** | Not supported. | **Protective function** | With load short-circuit protection. |

## ● Transistor Output Unit (Fujitsu Connector, 30 mm Width)
## NX-OD6121-6

| | | | |
|---|---|---|---|
| **Unit name** | Transistor Output Unit | **Model** | NX-OD6121-6 |
| **Number of points** | 32 points | **External connection terminals** | Fujitsu connector (40 terminals) |
| **I/O refreshing method** | Switching Synchronous I/O refreshing and Free-Run refreshing | | |
| **Indicators** | TS indicator, output indicator<br> 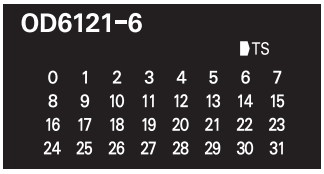 <br> | **Internal I/O common** | NPN |
| | | **Rated voltage** | 12 to 24 VDC |
| | | **Operating load voltage range** | 10.2 to 28.8 VDC |
| | | **Maximum value of load current** | 0.5 A/point, 2 A/common, 4 A/Unit |
| | | **Maximum inrush current** | 4.0 A/point, 10 ms max. |
| | | **Leakage current** | 0.1 mA max. |
| | | **Residual voltage** | 1.5 V max. |
| | | **ON/OFF response time** | 0.1 ms max./0.8 ms max. |
| **Dimensions** | 30 (W) x 100 (H) x 71 (D) | **Isolation method** | Photocoupler isolation |
| **Insulation resistance** | 20 MΩ min. between isolated circuits (at 100 VDC) | **Dielectric strength** | 510 VAC between isolated circuits for 1 minute at a leakage current of 5 mA max. |
| **I/O power supply method** | Supply from external source | **Current capacity of I/O power supply terminal** | Without I/O power supply terminals |
| **NX Unit power consumption** | • Connected to a CPU Unit or Communication Control Unit<br>1.10 W max.<br>• Connected to a Communications Coupler Unit<br>0.80 W max. | **Current consumption from I/O power supply** | 50 mA max. |
| **Weight** | 90 g max. | | |
| **Circuit layout** | 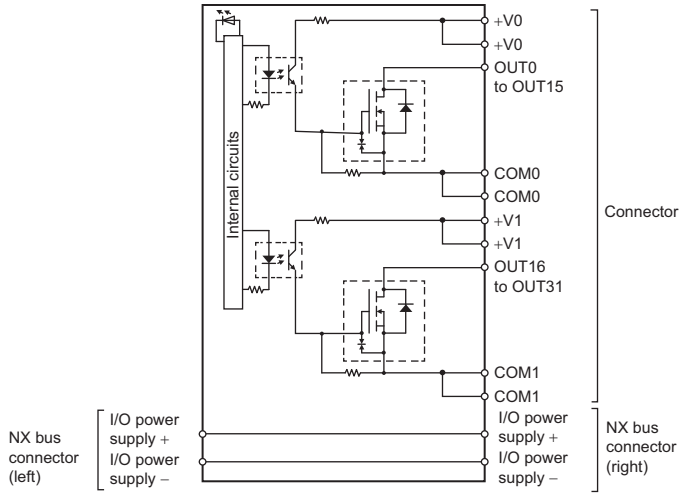 <br> | | |
| **Installation orientation and restrictions** | Installation orientation:<br>• Connected to a CPU Unit or Communication Control Unit: Possible in upright installation.<br>• Connected to a Communications Coupler Unit: Possible in 6 orientations.<br>Restrictions: No restrictions | | |
| **Terminal connection diagram** | 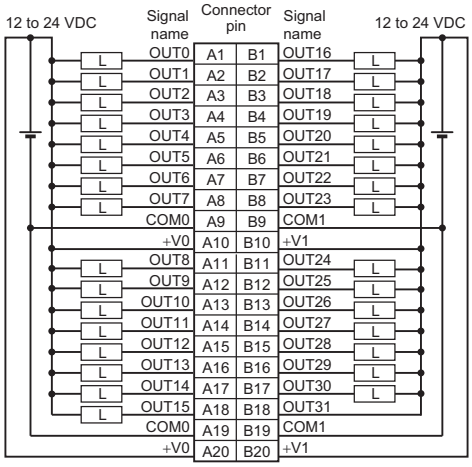 <br><br>• Be sure to wire both pins A9 and A19 (COM0).<br>• Be sure to wire both pins B9 and B19 (COM1).<br>• Be sure to wire both pins A10 and A20 (+V0).<br>• Be sure to wire both pins B10 and B20 (+V1). | | |
| **Disconnection/ Short-circuit detection** | Not supported. | **Protective function** | Not supported. |

## ● Relay Output Unit (Screwless Clamping Terminal Block, 12 mm Width) NX-OC2633

| | | | |
|---|---|---|---|
| **Unit name** | Relay Output Units | **Model** | NX-OC2633 |
| **Number of points** | 2 points, independent contacts | **External connection terminals** | Screwless clamping terminal block (8 terminals) |
| **I/O refreshing method** | Free-Run refreshing | | |
| **Indicators** | TS indicator, output indicator<br> | **Relay type** | N.O. contact |
| | | **Maximum switching capacity** | 250 VAC/2 A (cosϕ = 1),<br>250 VAC/2 A (cosϕ = 0.4),<br>24 VDC/2 A, 4 A/Unit |
| | | **Minimum switching capacity** | 5 VDC, 1 mA |
| **Relay service life** | Electrical: 100,000 operations*<br>Mechanical: 20,000,000 operations | **ON/OFF response time** | 15 ms max./15 ms max. |
| **Dimensions** | 12 (W) x 100 (H) x 71 (D) | **Isolation method** | Relay isolation |
| **Insulation resistance** | Between A1/B1 terminals and A3/B3 terminals: 20 MΩ min. (500 VDC)<br>Between the external terminals and internal circuits: 20 MΩ min. (500 VDC)<br>Between the internal circuit and GR terminal: 20 MΩ min. (100 VDC)<br>Between the external terminals and GR terminal: 20 MΩ min. (500 VDC) | **Dielectric strength** | Between A1/B1 terminals and A3/B3 terminals: 2300 VAC for 1 min at a leakage current of 5 mA max.<br>Between the external terminals and GR terminal: 2300 VAC for 1 min at a leakage current of 5 mA max.<br>Between the external terminals and internal circuits: 2300 VAC for 1 min at a leakage current of 5 mA max.<br>Between the internal circuit and GR terminal: 510 VAC for 1 min at a leakage current of 5 mA max. |
| **Vibration resistance** | Conforms to IEC60068-2-6.<br>5 to 8.4 Hz with amplitude of 3.5 mm, 8.4 to 150 Hz, acceleration of 9.8 m/s$^2$<br>100 min each in X, Y, and Z directions<br>(10 sweeps of 10 min each = 100 min total) | **Shock resistance** | 100 m/s$^2$, 3 times each in X, Y, and Z directions |
| **I/O power supply method** | Supply from external source | **Current capacity of I/O power supply terminal** | Without I/O power supply terminals |
| **NX Unit power consumption** | • Connected to a CPU Unit or Communication Control Unit<br>1.20 W max.<br>• Connected to a Communications Coupler Unit<br>0.80 W max. | **I/O current consumption** | No consumption |
| **Weight** | 65 g max. | | |
| **Circuit layout** | 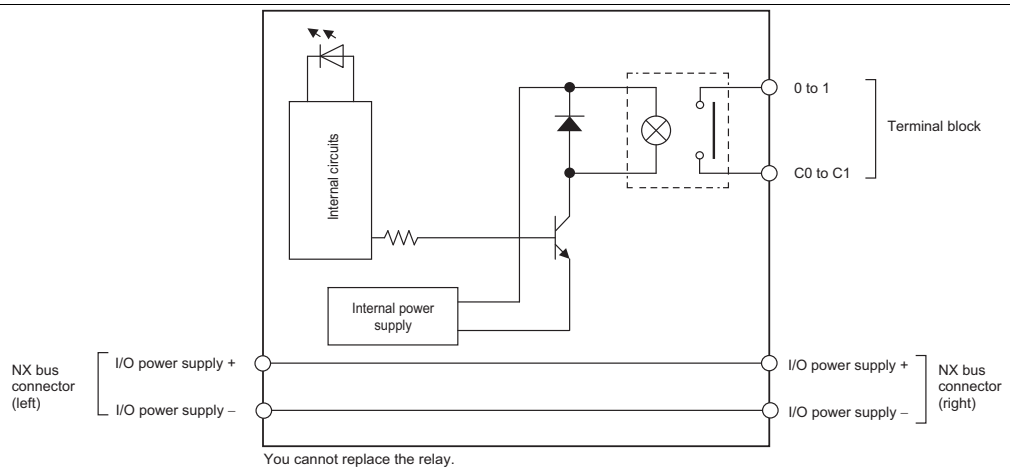 | | |
| **Installation orientation and restrictions** | Installation orientation:<br>• Connected to a CPU Unit or Communication Control Unit: Possible in upright installation.<br>• Connected to a Communications Coupler Unit: Possible in 6 orientations.<br>Restrictions: No restrictions | | |
| **Terminal connection diagram** | 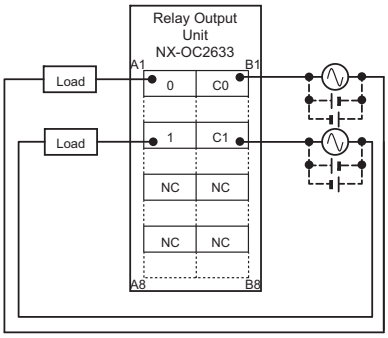 | | |
| **Disconnection/ Short-circuit detection** | Not supported. | **Protective function** | Not supported. |

* Electrical service life will vary depending on the current value. Refer to "NX-series Digital I/O Units User's Manual" for details.

## NX-OC2733

| | | | |
|---|---|---|---|
| **Unit name** | Relay Output Unit | **Model** | NX-OC2733 |
| **Number of points** | 2 points, independent contacts | **External connection terminals** | Screwless clamping terminal block (8 terminals) |
| **I/O refreshing method** | Free-Run refreshing | | |
| **Indicators** | TS indicator, output indicator<br> | **Maximum switching capacity** | 250 VAC/2 A (cosϕ = 1),<br>250 VAC/2 A (cosϕ = 0.4),<br>24 VDC/2 A,<br>4 A/Unit |
| | | **Minimum switching capacity** | 5 VDC, 10 mA |
| **Relay service life** | Electrical: 100,000 operations<br>Mechanical: 20,000,000 operations | **ON/OFF response time** | 15 ms max./15 ms max. |
| **Dimensions** | 12 (W) x 100 (H) x 71 (D) | **Isolation method** | Relay isolation |
| **Insulation resistance** | Between A1/3, B1/3 terminals and A5/7, B5/7 terminals: 20 MΩ min. (at 500 VDC)<br>Between the external terminals and functional ground terminal: 20 MΩ min. (at 500 VDC)<br>Between the external terminals and internal circuits: 20 MΩ min. (at 500 VDC)<br>Between the internal circuit and the functional ground terminal: 20 MΩ min. (at 100 VDC) | **Dielectric strength** | Between A1/3, B1/3 terminals and A5/7, B5/7 terminals: 2300 VAC for 1 min at a leakage current of 5 mA max.<br>Between the external terminals and the functional ground terminal: 2300 VAC for 1 min at a leakage current of 5 mA max.<br>Between the external terminals and internal circuits: 2300 VAC for 1 min at a leakage current of 5 mA max.<br>Between the internal circuit and the functional ground terminal: 510 VAC for 1 min at a leakage current of 5 mA max. |
| **I/O power supply method** | Supply from external source | **Current capacity of I/O power supply terminal** | Without I/O power supply terminals |
| **NX Unit power consumption** | • Connected to a CPU Unit or Communication Control Unit<br>1.30 W max.<br>• Connected to a Communications Coupler Unit<br>0.95 W max. | **Current consumption from I/O power supply** | No consumption |
| **Weight** | 70 g max. | | |
| **Circuit layout** | 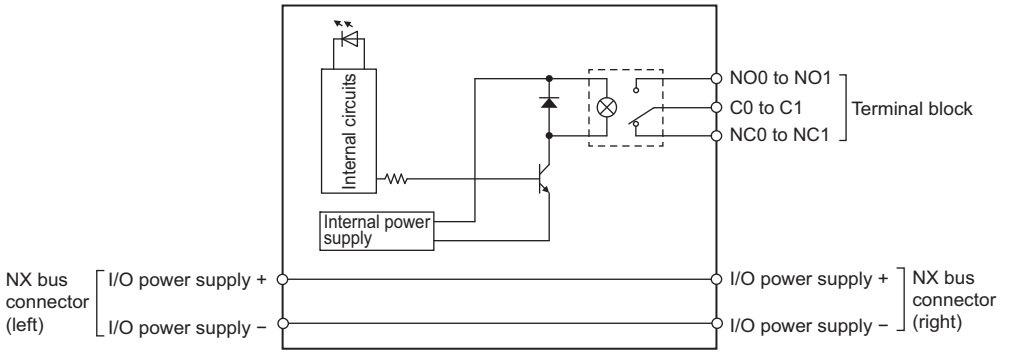 <br>NO0 and NO1 are normal open contacts, and NC0 and NC1 are normal close contacts.<br>You cannot replace the relay. | | |
| **Installation orientation and restrictions** | Installation orientation:<br>• Connected to a CPU Unit or Communication Control Unit: Possible in upright installation.<br>• Connected to a Communications Coupler Unit: Possible in 6 orientations.<br>Restrictions: No restrictions | | |
| **Terminal connection diagram** | 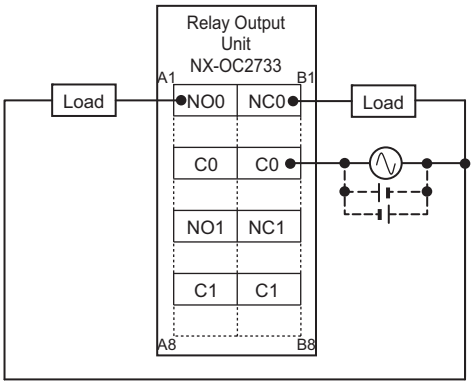 | | |
| **Disconnection/Short-circuit detection** | Not supported. | **Protective function** | Not supported. |

## ● Relay Output Unit (Screwless Clamping Terminal Block, 24 mm Width) NX-OC4633

| | | | |
|---|---|---|---|
| **Unit name** | Relay Output Unit | **Model** | NX-OC4633 |
| **Number of points** | 8 points, independent contacts | **External connection terminals** | Screwless clamping terminal block (8 terminals x 2) |
| **I/O refreshing method** | Free-Run refreshing | | |
| **Indicators** | TS indicator, output indicator<br>OC4633<br>TS<br>0 1<br>2 3<br>4 5<br>6 7 | **Relay type** | N.O. contact |
| | | **Maximum switching capacity** | 250 VAC/2 A (cosϕ = 1),<br>250 VAC/2 A (cosϕ = 0.4),<br>24 VDC/2 A,<br>8 A/Unit |
| | | **Minimum switching capacity** | 5 VDC, 1 mA |
| **Relay service life** | Electrical: 100,000 operations*<br>Mechanical: 20,000,000 operations | **ON/OFF response time** | 15 ms max./15 ms max. |
| **Dimensions** | 24 (W) x 100 (H) x 71 (D) | **Isolation method** | Relay isolation |
| **Insulation resistance** | Between output bits: 20 MΩ min. (at 500 VDC)<br>Between the external terminals and the functional ground terminal: 20 MΩ min. (at 500 VDC)<br>Between the external terminals and internal circuits: 20 MΩ min. (at 500 VDC)<br>Between the internal circuit and the functional ground terminal: 20 MΩ min. (at 100 VDC) | **Dielectric strength** | Between output bits: 2300 VAC for 1 min at a leakage current of 5 mA max.<br>Between the external terminals and the functional ground terminal: 2300 VAC for 1 min at a leakage current of 5 mA max.<br>Between the external terminals and internal circuits: 2300 VAC for 1 min at a leakage current of 5 mA max.<br>Between the internal circuit and the functional ground terminal: 510 VAC for 1 min at a leakage current of 5 mA max. |
| **Vibration resistance** | Conforms to IEC 60068-2-6.<br>5 to 8.4 Hz with amplitude of 3.5 mm, 8.4 to 150 Hz, acceleration of 9.8 m/s$^2$<br>100 min each in X, Y, and Z directions (10 sweeps of 10 min each = 100 min total) | **Shock resistance** | 100 m/s$^2$, 3 times each in X, Y, and Z directions |
| **I/O power supply method** | Supply from external source | **Current capacity of I/O power supply terminal** | Without I/O power supply terminals |
| **NX Unit power consumption** | • Connected to a CPU Unit or Communication Control Unit<br>2.00 W max.<br>• Connected to a Communications Coupler Unit<br>1.65 W max. | **Current consumption from I/O power supply** | No consumption |
| **Weight** | 140 g max. | | |
| **Circuit layout** | 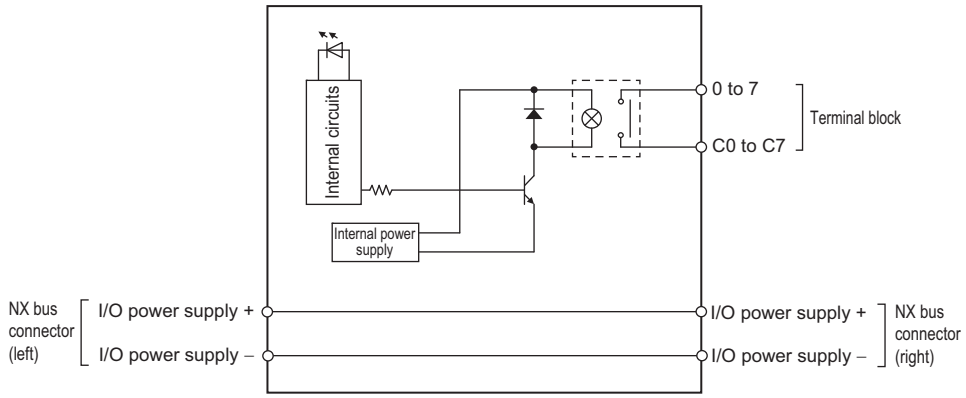 <br>You cannot replace the relay. | | |

| | |
|---|---|
| **Installation orientation and restrictions** | Installation orientation:<br>• Connected to a CPU Unit or Communication Control Unit: Possible in upright installation.<br>• Connected to a Communications Coupler Unit: Possible in 6 orientations.<br><br>Restrictions: As shown in the following.<br> 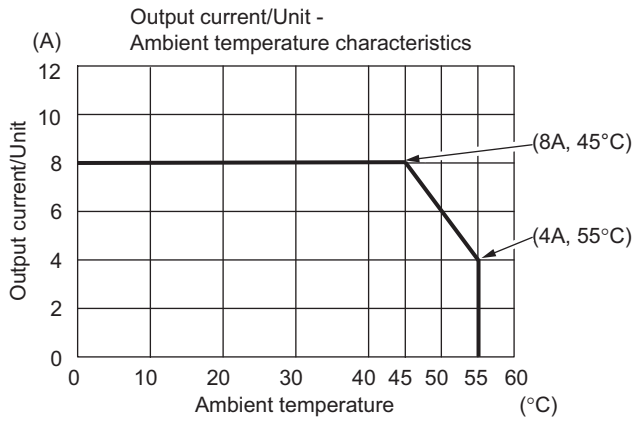 <br> |
| **Terminal connection diagram** | 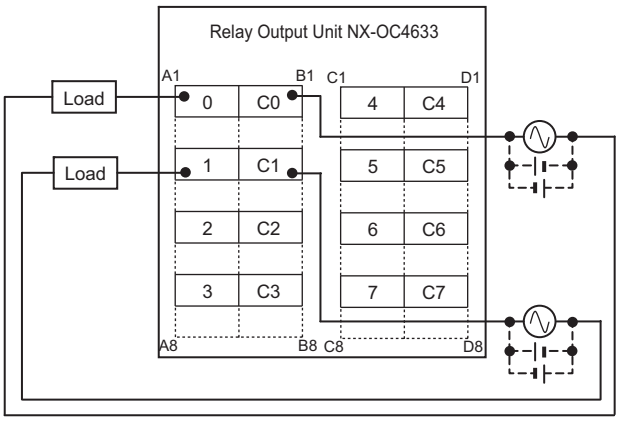 <br> |

* Electrical service life will vary depending on the current value. Refer to "NX-series Digital I/O Units User's Manual" for details.

## ● DC Input/Transistor Output Unit (MIL Connector, 30 mm Width)
## NX-MD6121-5

| | | | | | |
|---|---|---|---|---|---|
| **Unit name** | | DC Input/Transistor Output Unit | **Model** | | NX-MD6121-5 |
| **Number of points** | | 16 inputs/16 outputs | **External connection terminals** | | 2 MIL connectors (20 terminals) |
| **I/O refreshing method** | | Switching Synchronous I/O refreshing and Free-Run refreshing | | | |
| **Output section (CN1)** | **Internal I/O common** | NPN | **Input section (CN2)** | **Internal I/O common** | For both NPN/PNP |
| | **Rated voltage** | 12 to 24 VDC | | **Rated input voltage** | 24 VDC (15 to 28.8 VDC) |
| | **Operating load voltage range** | 10.2 to 28.8 VDC | | **Input current** | 7 mA typical (at 24 VDC) |
| | **Maximum value of load current** | 0.5 A/point, 2 A/Unit | | **ON voltage/ON current** | 15 VDC min./3 mA min. (between COM and each signal) |
| | **Maximum inrush current** | 4.0 A/point, 10 ms max. | | **OFF voltage/OFF current** | 5 VDC max./1 mA max. (between COM and each signal) |
| | **Leakage current** | 0.1 mA max. | | **ON/OFF response time** | 20 µs max./400 µs max. |
| | **Residual voltage** | 1.5 V max. | | **Input filter time** | No filter, 0.25 ms, 0.5 ms, 1 ms (default), 2 ms, 4 ms, 8 ms, 16 ms, 32 ms, 64 ms, 128 ms, 256 ms |
| | **ON/OFF response time** | 0.1 ms max./0.8 ms max. | | | |
| **Indicators** | | TS indicator, I/O indicators | **Dimensions** | | 30 (W) x 100 (H) x 71 (D) |
| | | | **Isolation method** | | Photocoupler isolation |
| | | | **Insulation resistance** | | 20 MΩ min. between isolated circuits (at 100 VDC) |
| | | | **Dielectric strength** | | 510 VAC between isolated circuits for 1 minute at a leakage current of 5 mA max. |
| | | | **I/O power supply method** | | Supply from external source |
| | | | **Current capacity of I/O power supply terminal** | | Without I/O power supply terminals |
| | | | **NX Unit power consumption** | | • Connected to a CPU Unit or Communication Control Unit 1.00 W max.<br>• Connected to a Communications Coupler Unit 0.70 W max. |
| | | | **Current consumption from I/O power supply** | | 30 mA max. |
| | | | **Weight** | | 105 g max. |

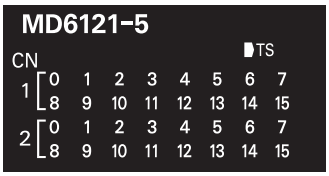


**Circuit layout**

CN1 (left) output circuit

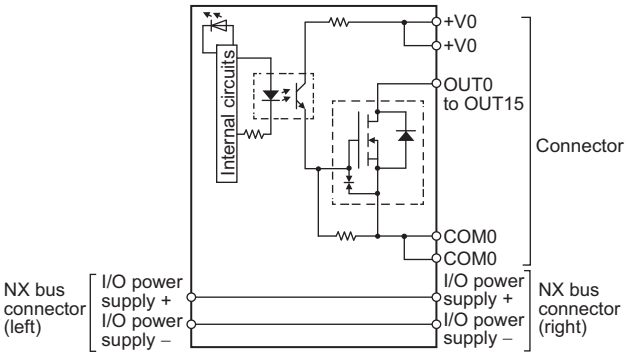


CN2 (right) input circuit

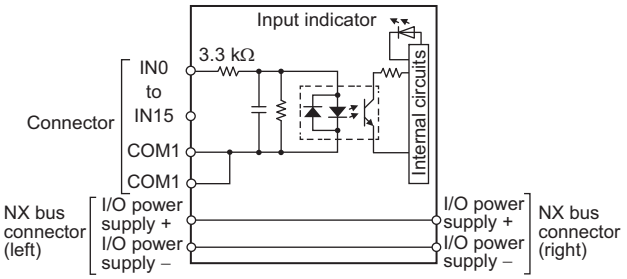

**Installation orientation and restrictions**

Installation orientation:
- Connected to a CPU Unit or Communication Control Unit: Possible in upright installation.
- Connected to a Communications Coupler Unit: Possible in 6 orientations.

Restrictions: As shown in the following.

• For upright installation

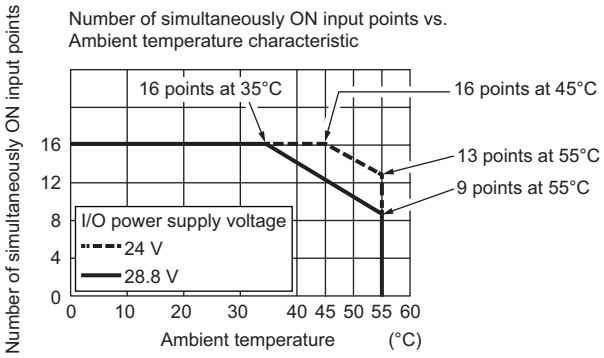


• For any installation other than upright

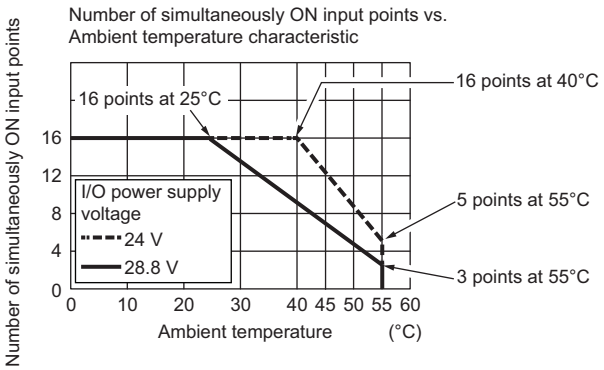


**Terminal connection diagram**

CN1 (left) output terminal

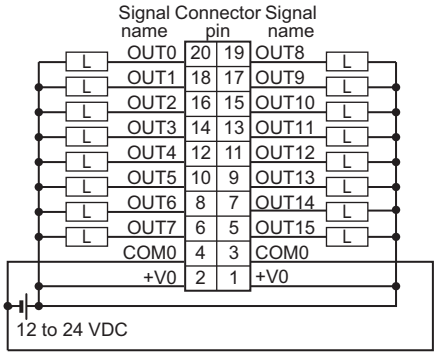


- Be sure to wire both pins 3 and 4 (COM0) of CN1.
- Be sure to wire both pins 1 and 2 (+V0) of CN1.

CN2 (right) input terminal

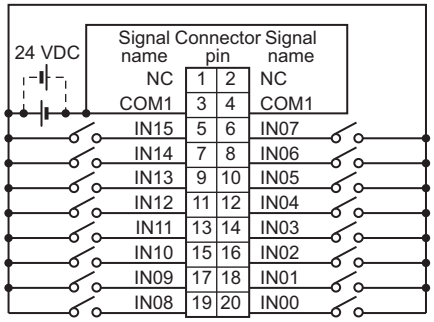


- The polarity of the input power supply of CN2 can be connected in either direction.
- Be sure to wire both pins 3 and 4 (COM1) of CN2, and set the same polarity for both pins.

| **Disconnection/Short-circuit detection** | Not supported. | **Protective function** | Not supported. |
|---|---|---|---|

## NX-MD6256-5

| | | | | | |
|---|---|---|---|---|---|
| **Unit name** | | DC Input/Transistor Output Unit | **Model** | | NX-MD6256-5 |
| **Number of points** | | 16 inputs/16 outputs | **External connection terminals** | | 2 MIL connectors (20 terminals) |
| **I/O refreshing method** | | Switching Synchronous I/O refreshing and Free-Run refreshing | | | |
| **Output section (CN1)** | **Internal I/O common** | PNP | **Input section (CN2)** | **Internal I/O common** | For both NPN/PNP |
| | **Rated voltage** | 24 VDC | | **Rated input voltage** | 24 VDC (15 to 28.8 VDC) |
| | **Operating load voltage range** | 20.4 to 28.8 VDC | | **Input current** | 7 mA typical (at 24 VDC) |
| | **Maximum value of load current** | 0.5 A/point, 2 A/Unit | | **ON voltage/ON current** | 15 VDC min./3 mA min. (between COM and each signal) |
| | **Maximum inrush current** | 4.0 A/point, 10 ms max. | | **OFF voltage/OFF current** | 5 VDC max./1 mA max. (between COM and each signal) |
| | **Leakage current** | 0.1 mA max. | | **ON/OFF response time** | 20 µs max./400 µs max. |
| | **Residual voltage** | 1.5 V max. | | **Input filter time** | No filter, 0.25 ms, 0.5 ms, 1 ms (default), 2 ms, 4 ms, 8 ms, 16 ms, 32 ms, 64 ms, 128 ms, 256 ms |
| | **ON/OFF response time** | 0.5 ms max./1.0 ms max. | | | |
| **Indicators** | | TS indicator, I/O indicators | **Dimensions** | | 30 (W) x 100 (H) x 71 (D) |
| | | | **Isolation method** | | Photocoupler isolation |
| | | | **Insulation resistance** | | 20 MΩ min. between isolated circuits (at 100 VDC) |
| | | | **Dielectric strength** | | 510 VAC between isolated circuits for 1 minute at a leakage current of 5 mA max. |
| | | | **I/O power supply method** | | Supply from external source |
| | | | **Current capacity of I/O power supply terminal** | | Without I/O power supply terminals |
| | | | **NX Unit power consumption** | | • Connected to a CPU Unit or Communication Control Unit 1.10 W max.<br>• Connected to a Communications Coupler Unit 0.75 W max. |
| | | | **Current consumption from I/O power supply** | | 40 mA max. |
| | | | **Weight** | | 110 g max. |
| **Circuit layout** | | CN1 (left) output circuit<br>CN2 (right) input circuit | | | |

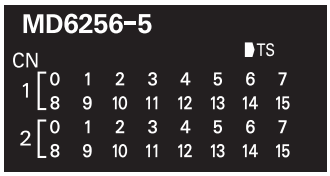


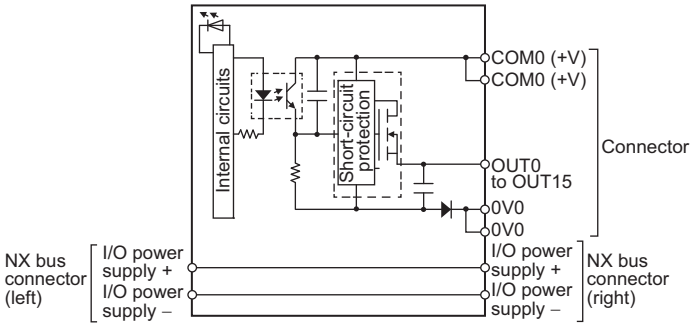


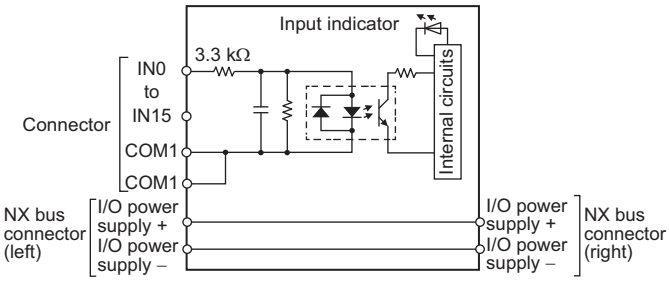

**Installation orientation and restrictions**

Installation orientation:
- Connected to a CPU Unit or Communication Control Unit: Possible in upright installation.
- Connected to a Communications Coupler Unit: Possible in 6 orientations.

Restrictions: As shown in the following.

• For upright installation

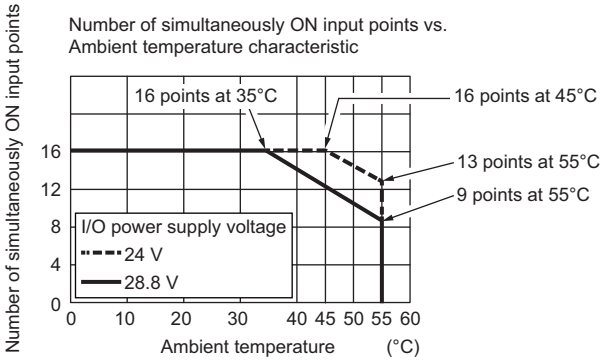


• For any installation other than upright

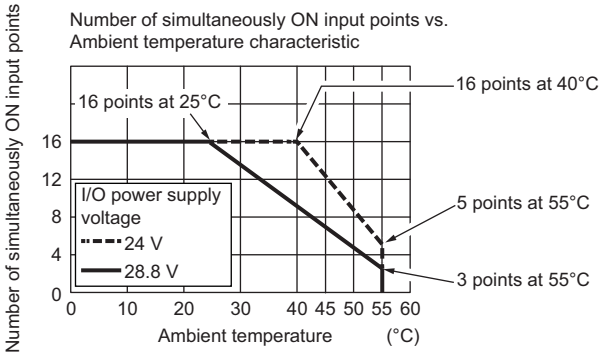


**Terminal connection diagram**

CN1 (left) output terminal

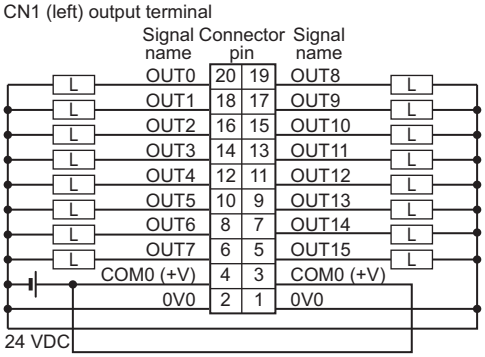


- Be sure to wire both pins 3 and 4 (COM0 (+V)) of CN1.
- Be sure to wire both pins 1 and 2 (0V0) of CN1.

CN2 (right) input terminal

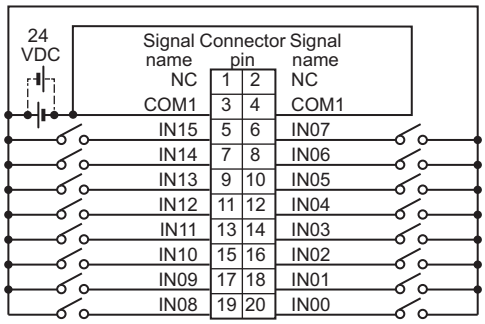


- The polarity of the input power supply of CN2 can be connected in either direction.
- Be sure to wire both pins 3 and 4 (COM1) of CN2, and set the same polarity for both pins.

| **Disconnection/Short-circuit detection** | Not supported. | **Protective function** | With load short-circuit protection. |
|---|---|---|---|

## ● DC Input/Transistor Output Unit (Fujitsu Connector, 30 mm Width)
## NX-MD6121-6

| | | | | | |
|---|---|---|---|---|---|
| **Unit name** | | DC Input/Transistor Output Unit | **Model** | | NX-MD6121-6 |
| **Number of points** | | 16 inputs/16 outputs | **External connection terminals** | | 2 Fujitsu connectors (24 terminals) |
| **I/O refreshing method** | | Switching Synchronous I/O refreshing and Free-Run refreshing | | | |
| **Output section (CN1)** | **Internal I/O common** | NPN | **Input section (CN2)** | **Internal I/O common** | For both NPN/PNP |
| | **Rated voltage** | 12 to 24 VDC | | **Rated input voltage** | 24 VDC (15 to 28.8 VDC) |
| | **Operating load voltage range** | 10.2 to 28.8 VDC | | **Input current** | 7 mA typical (at 24 VDC) |
| | **Maximum value of load current** | 0.5 A/point, 2 A/Unit | | **ON voltage/ON current** | 15 VDC min./3 mA min. (between COM and each signal) |
| | **Maximum inrush current** | 4.0 A/point, 10 ms max. | | **OFF voltage/OFF current** | 5 VDC max./1 mA max. (between COM and each signal) |
| | **Leakage current** | 0.1 mA max. | | **ON/OFF response time** | 20 µs max./400 µs max. |
| | **Residual voltage** | 1.5 V max. | | **Input filter time** | No filter, 0.25 ms, 0.5 ms, 1 ms (default), 2 ms, 4 ms, 8 ms, 16 ms, 32 ms, 64 ms, 128 ms, 256 ms |
| | **ON/OFF response time** | 0.1 ms max./0.8 ms max. | | | |
| **Indicators** | | TS indicator, I/O indicators | **Dimensions** | | 30 (W) x 100 (H) x 71 (D) |
| | | | **Isolation method** | | Photocoupler isolation |
| | | | **Insulation resistance** | | 20 MΩ min. between isolated circuits (at 100 VDC) |
| | | | **Dielectric strength** | | 510 VAC between isolated circuits for 1 minute at a leakage current of 5 mA max. |
| | | | **I/O power supply method** | | Supply from external source |
| | | | **Current capacity of I/O power supply terminal** | | Without I/O power supply terminals |
| | | | **NX Unit power consumption** | | • Connected to a CPU Unit or Communication Control Unit 1.00 W max.<br>• Connected to a Communications Coupler Unit 0.70 W max. |
| | | | **Current consumption from I/O power supply** | | 30 mA max. |
| | | | **Weight** | | 95 g max. |

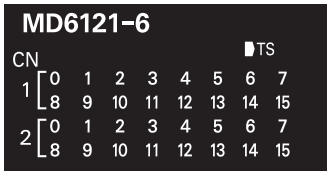


**Circuit layout**

CN1 (left) output circuit

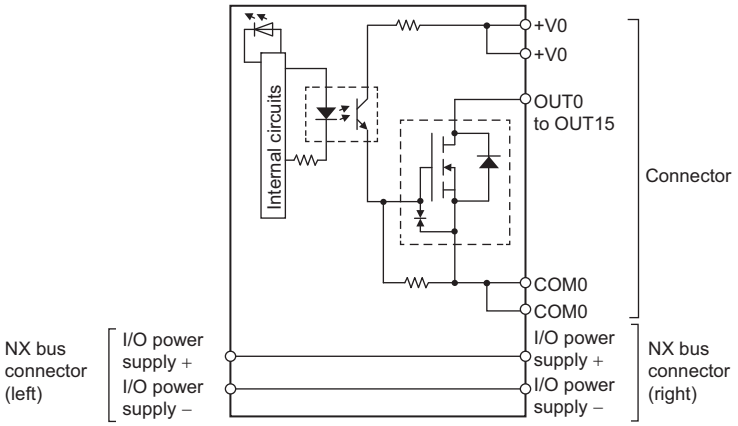


CN2 (right) input circuit

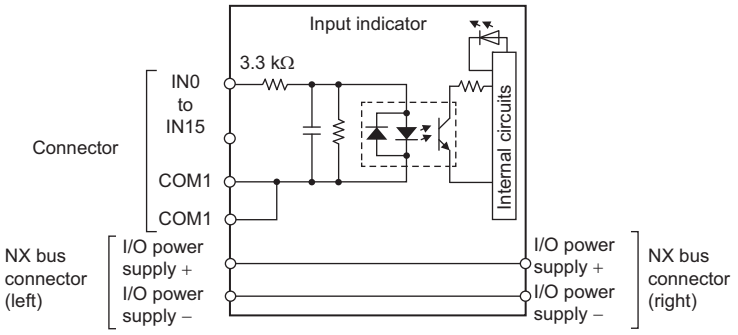

| | |
|---|---|
| **Installation orientation and restrictions** | Installation orientation:<br>• Connected to a CPU Unit or Communication Control Unit: Possible in upright installation.<br>• Connected to a Communications Coupler Unit: Possible in 6 orientations.<br>Restrictions: As shown in the following.<br><br>• For upright installation<br><br>Number of simultaneously ON input points vs. Ambient temperature characteristic<br> 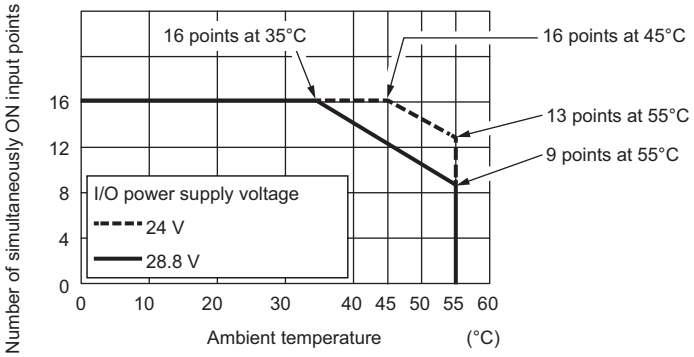 <br><br><br>• For any installation other than upright<br><br>Number of simultaneously ON input points vs. Ambient temperature characteristic<br> 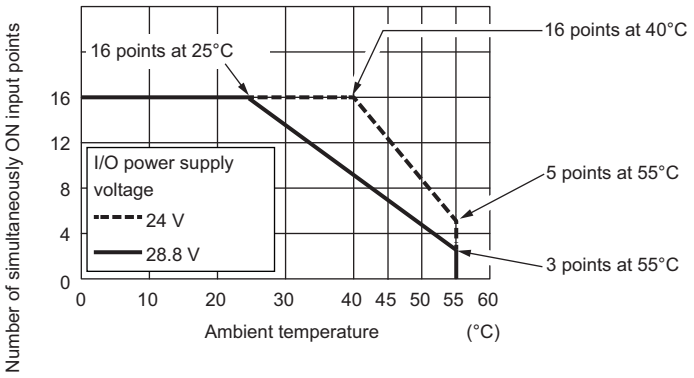 <br> |

| | |
|---|---|
| **Terminal connection diagram** | CN1 (left) output terminal<br> 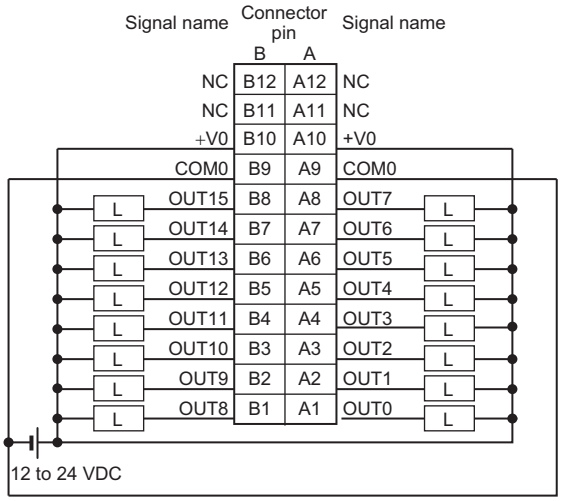 <br><br>• Be sure to wire both pins A9 and B9 (COM0) of CN1.<br>• Be sure to wire both pins A10 and B10 (+V0) of CN1.<br><br>CN2 (right) input terminal<br> 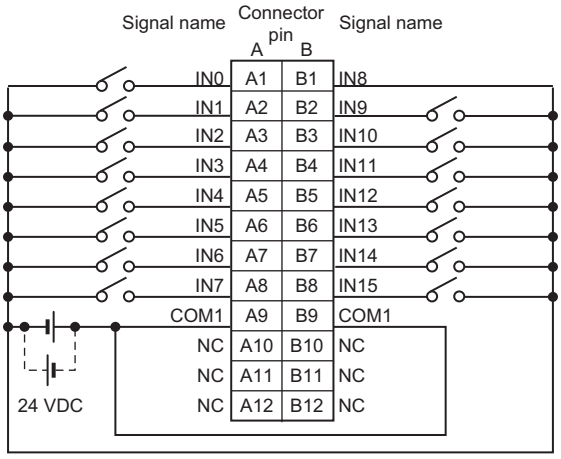 <br><br>• The polarity of the input power supply of CN2 can be connected in either direction.<br>• Be sure to wire both pins A9 and B9 (COM1) of CN2, and set the same polarity for both pins. |

| | | | |
|---|---|---|---|
| **Disconnection/Short-circuit detection** | Not supported. | **Protective function** | Not supported. |

# Version Information

## Connected to a CPU Unit

Refer to the user's manual for the CPU Unit for details on the CPU Units to which NX Units can be connected.

| NX Unit | | Corresponding unit versions/versions | |
|---|---|---|---|
| Model | Unit version | CPU Unit | Sysmac Studio |
| NX-ID3317 | Ver.1.0 | Ver.1.13 | Ver.1.17 |
| NX-ID3343 | | | |
| NX-ID3344 | | | |
| NX-ID3417 | | | |
| NX-ID3443 | | | |
| NX-ID3444 | | | |
| NX-ID4342 | | | |
| NX-ID4442 | | | |
| NX-ID5142-1 | | | |
| NX-ID5142-5 | | | |
| NX-ID5342 | | | |
| NX-ID5442 | | | |
| NX-ID6142-5 | | | |
| NX-ID6142-6 | | | |
| NX-IA3117 | | | |
| NX-OD2154 | | | |
| NX-OD2258 | | | |
| NX-OD3121 | | | |
| NX-OD3153 | | | |
| NX-OD3256 | | | |
| NX-OD3257 | | | |
| NX-OD3268 | | | |
| NX-OD4121 | | | |
| NX-OD4256 | | | |
| NX-OD5121 | | | |
| NX-OD5121-1 | | | |
| NX-OD5121-5 | | | |
| NX-OD5256 | | | |
| NX-OD5256-1 | | | |
| NX-OD5256-5 | | | |
| NX-OD6121-5 | | | |
| NX-OD6121-6 | | | |
| NX-OD6256-5 | | | |
| NX-OC2633 | | | |
| NX-OC2733 | | | |
| NX-OC4633 | | | |
| NX-MD6121-5 | | | |
| NX-MD6121-6 | | | |
| NX-MD6256-5 | | | |

**Note:** Some Units do not have all of the versions given in the above table. If a Unit does not have the specified version, support is provided by the oldest available version after the specified version. Refer to the user's manuals for the specific Units for the relation between models and versions.

## Connected to an EtherCAT Coupler Unit

| NX Unit | | Corresponding unit versions/versions | | |
|---|---|---|---|---|
| Model | Unit version | EtherCAT Coupler Unit | CPU Unit or Industrial PC | Sysmac Studio |
| NX-ID3317 | Ver.1.0 | Ver.1.0 | Ver.1.05 | Ver.1.06 |
| NX-ID3343 | | | | |
| NX-ID3344 | | Ver.1.1 | Ver.1.06 * | Ver.1.07 |
| NX-ID3417 | | Ver.1.0 | Ver.1.05 | Ver.1.06 |
| NX-ID3443 | | | | |
| NX-ID3444 | | Ver.1.1 | Ver.1.06 * | Ver.1.07 |
| NX-ID4342 | | Ver.1.0 | Ver.1.05 | Ver.1.06 |
| NX-ID4442 | | | | |
| NX-ID5142-1 | | | | Ver.1.13 |
| NX-ID5142-5 | | | | Ver.1.10 |
| NX-ID5342 | | | | Ver.1.06 |
| NX-ID5442 | | | | |
| NX-ID6142-5 | | | | Ver.1.10 |
| NX-ID6142-6 | | | | Ver.1.13 |
| NX-IA3117 | | | | Ver.1.08 |
| NX-OD2154 | Ver.1.0 | Ver.1.1 | Ver.1.06 * | Ver.1.07 |
| NX-OD2258 | | | | |
| NX-OD3121 | | Ver.1.0 | Ver.1.05 | Ver.1.06 |
| NX-OD3153 | | | | |
| NX-OD3256 | | | | |
| NX-OD3257 | | | | |
| NX-OD3268 | | | | Ver.1.13 |
| NX-OD4121 | | | | Ver.1.06 |
| NX-OD4256 | | | | |
| NX-OD5121 | | | | |
| NX-OD5121-1 | | | | Ver.1.13 |
| NX-OD5121-5 | | | | Ver.1.10 |
| NX-OD5256 | | | | Ver.1.06 |
| NX-OD5256-1 | | | | Ver.1.13 |
| NX-OD5256-5 | | | | Ver.1.10 |
| NX-OD6121-5 | | | | |
| NX-OD6121-6 | | | | Ver.1.13 |
| NX-OD6256-5 | | | | Ver.1.10 |
| NX-OC2633 | | | | Ver.1.06 |
| NX-OC2733 | | | | Ver.1.08 |
| NX-OC4633 | | | | Ver.1.17 |
| NX-MD6121-5 | Ver.1.0 | Ver.1.0 | Ver.1.05 | Ver.1.10 |
| NX-MD6121-6 | | | | Ver.1.13 |
| NX-MD6256-5 | | | | Ver.1.10 |

**Note:** Some Units do not have all of the versions given in the above table. If a Unit does not have the specified version, support is provided by the oldest available version after the specified version. Refer to the user's manuals for the specific Units for the relation between models and versions.

* The instructions for time stamp refreshing are supported by CPU Units with unit version 1.06 or later. If you do not use instructions for time stamp refreshing, you can use version 1.05. Refer to the *NJ/NX-series Instructions Reference Manual* (Cat. No. W502) for details on the instructions for time stamp refreshing.

## Connected to an EtherNet/IP Coupler Unit

| NX Unit | | Corresponding unit versions/versions | | | | | |
|---|---|---|---|---|---|---|---|
| Model | Unit version | Application with an NJ/NX/NY-series Controller *1 | | | Application with a CS/CJ/CP-series PLC *2 | | |
| | | EtherNet/IP Coupler Unit | CPU Unit or Industrial PC | Sysmac Studio | EtherNet/IP Coupler Unit | Sysmac Studio | NX-IO Configurator *3 |
| NX-ID3317 | Ver. 1.0 | Ver. 1.2 | Ver. 1.14 | Ver. 1.19 | Ver. 1.0 | Ver. 1.10 | Ver. 1.00 |
| NX-ID3343 | | | | | | | |
| NX-ID3344 | | --- | --- | --- | --- | --- | --- |
| NX-ID3417 | | Ver. 1.2 | Ver. 1.14 | Ver. 1.19 | Ver. 1.0 | Ver. 1.10 | Ver. 1.00 |
| NX-ID3443 | | | | | | | |
| NX-ID3444 | | --- | --- | --- | --- | --- | --- |
| NX-ID4342 | | Ver. 1.2 | Ver. 1.14 | Ver. 1.19 | Ver. 1.0 | Ver. 1.10 | Ver. 1.00 |
| NX-ID4442 | | | | | | | |
| NX-ID5142-1 | | | | | | Ver. 1.13 | |
| NX-ID5142-5 | | | | | | Ver. 1.10 | |
| NX-ID5342 | | | | | | | |
| NX-ID5442 | | | | | | | |
| NX-ID6142-5 | | | | | | | |
| NX-ID6142-6 | | | | | | Ver. 1.13 | |
| NX-IA3117 | | | | | | Ver. 1.10 | |
| NX-OD2154 | | --- | --- | --- | --- | --- | --- |
| NX-OD2258 | | | | | | | |
| NX-OD3121 | | Ver. 1.2 | Ver. 1.14 | Ver. 1.19 | Ver. 1.0 | Ver. 1.10 | Ver. 1.00 |
| NX-OD3153 | | | | | | | |
| NX-OD3256 | | | | | | | |
| NX-OD3257 | | | | | | | |
| NX-OD3268 | | | | | | Ver. 1.13 | |
| NX-OD4121 | | | | | | Ver. 1.10 | |
| NX-OD4256 | | | | | | | |
| NX-OD5121 | | | | | | | |
| NX-OD5121-1 | | | | | | Ver. 1.13 | |
| NX-OD5121-5 | | | | | | Ver. 1.10 | |
| NX-OD5256 | | | | | | | |
| NX-OD5256-1 | | | | | | Ver. 1.13 | |
| NX-OD5256-5 | | | | | | Ver. 1.10 | |
| NX-OD6121-5 | | | | | | | |
| NX-OD6121-6 | | | | | | Ver. 1.13 | |
| NX-OD6256-5 | | | | | | Ver. 1.10 | |
| NX-OC2633 | | | | | | | |
| NX-OC2733 | | | | | | | |
| NX-OC4633 | | | | | | Ver. 1.17 | |
| NX-MD6121-5 | | | | | | Ver. 1.10 | |
| NX-MD6121-6 | | | | | | Ver. 1.13 | |
| NX-MD6256-5 | | | | | | Ver. 1.10 | |

**Note: 1.** Some Units do not have all of the versions given in the above table. If a Unit does not have the specified version, support is provided by the oldest available version after the specified version. Refer to the user's manuals for the specific Units for the relation between models and versions.

**2.** Note: You cannot connect the relevant NX Unit to the target Communications Coupler Unit if "---" is shown in the corresponding unit versions/versions column.

**✻1** Refer to the user's manual for the EtherNet/IP Coupler Units for information on the unit versions of EtherNet/IP Units that are compatible with EtherNet/IP Coupler Units.

**✻2** Refer to the user's manual for the EtherNet/IP Coupler Units for information on the unit versions of CPU Units and EtherNet/IP Units that are compatible with EtherNet/IP Coupler Units.

**✻3** For connection to an EtherNet/IP Coupler Unit with unit version 1.0, connection is supported only for a connection to the peripheral USB port on the EtherNet/IP Coupler Unit. You cannot connect by any other path. If you need to connect by another path, use an EtherNet/IP Coupler Unit with unit version 1.2 or later.

## Connected to Communication Control Units

| NX Unit | | Corresponding unit versions/versions | |
|---|---|---|---|
| Model | Unit version | Communication Control Unit | Sysmac Studio |
| NX-ID3317 | Ver. 1.0 | Ver. 1.00 | Ver. 1.24 |
| NX-ID3343 | | | |
| NX-ID3344 | | --- | --- |
| NX-ID3417 | | Ver. 1.00 | Ver. 1.24 |
| NX-ID3443 | | | |
| NX-ID3444 | Ver. 1.0 | --- | --- |
| NX-ID4342 | | Ver. 1.00 | Ver. 1.24 |
| NX-ID4442 | | | |
| NX-ID5142-1 | | | |
| NX-ID5142-5 | | | |
| NX-ID5342 | | | |
| NX-ID5442 | | | |
| NX-ID6142-5 | | | |
| NX-ID6142-6 | | | |
| NX-IA3117 | | | |
| NX-OD2154 | | --- | --- |
| NX-OD2258 | | | |
| NX-OD3121 | | Ver. 1.00 | Ver. 1.24 |
| NX-OD3153 | | | |
| NX-OD3256 | | | |
| NX-OD3257 | | | |
| NX-OD3268 | | | |
| NX-OD4121 | | | |
| NX-OD4256 | | | |
| NX-OD5121 | | | |
| NX-OD5121-1 | | | |
| NX-OD5121-5 | | | |
| NX-OD5256 | | | |
| NX-OD5256-1 | | | |
| NX-OD5256-5 | | | |
| NX-OD6121-5 | | | |
| NX-OD6121-6 | | | |
| NX-OD6256-5 | | | |
| NX-OC2633 | | | |
| NX-OC2733 | | | |
| NX-OC4633 | | | |
| NX-MD6121-5 | | | |
| NX-MD6121-6 | | | |
| NX-MD6256-5 | | | |

**Note: 1.** Some Units do not have all of the versions given in the above table. If a Unit does not have the specified version, support is provided by the oldest available version after the specified version. Refer to the user's manuals for the specific Units for the relation between models and versions.

**2.** Note: You cannot connect the relevant NX Unit to the Communication Control Unit if "---" is shown in the corresponding unit versions/versions column.

# External Interface

## Screwless Clamping Terminal Block Type

**12 mm Width**

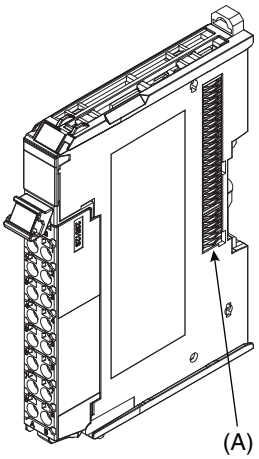


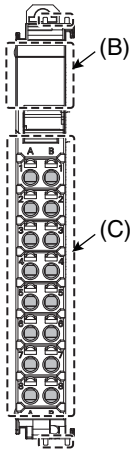


**24 mm Width**

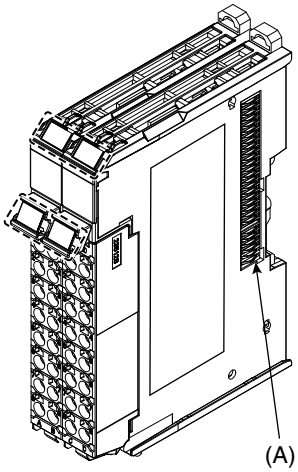


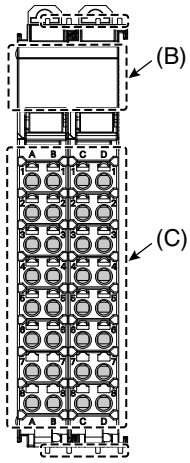


| Letter | Item | Specification |
|---|---|---|
| (A) | NX bus connector | This connector is used to connect to another Unit. |
| (B) | Indicators | The indicators show the current operating status of the Unit. |
| (C) | Terminal block | The terminal block is used to connect to external devices.<br>The number of terminals depends on the Unit. |

**Terminal Blocks**

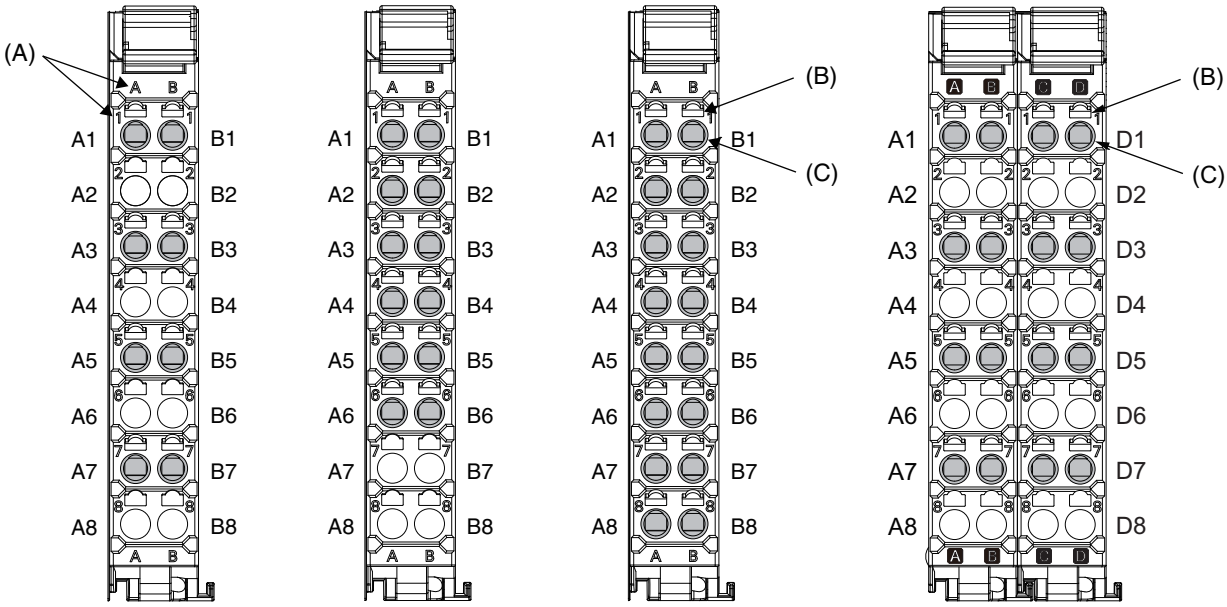


8 terminals | 12 terminals | 16 terminals | 8 terminals x 2

| Letter | Item | Specification |
|---|---|---|
| (A) | Terminal number indication | The terminal number is identified by a column (A through D) and a row (1 through 8).<br>Therefore, terminal numbers are written as a combination of columns and rows, A1 through A8 and B1 through B8.<br>The terminal number indication is the same regardless of the number of terminals on the terminal block. |
| (B) | Release hole | A flat-blade screwdriver is inserted here to attach and remove the wiring. |
| (C) | Terminal hole | The wires are inserted into these holes. |

## Applicable Terminal Blocks for Each Unit Model

| Unit model | Terminal Blocks | | | |
|---|---|---|---|---|
| | Model | No. of terminals | Ground terminal mark | Terminal current capacity |
| NX-ID3□□□ | NX-TBA122 | 12 | None | 10 A |
| NX-ID4□□□ | NX-TBA162 | 16 | None | 10 A |
| NX-ID5□□□ | NX-TBA162 | 16 | None | 10 A |
| NX-IA3117 | NX-TBA082 | 8 | None | 10 A |
| NX-OD2□□□ | NX-TBA082 | 8 | None | 10 A |
| NX-OD3□□□ (any model other than NX-OD3268) | NX-TBA122 | 12 | None | 10 A |
| NX-OD3268<br>NX-OD4□□□ | NX-TBA162 | 16 | None | 10 A |
| NX-OD5□□□ | NX-TBA162 | 16 | None | 10 A |
| NX-OC2□□□ | NX-TBA082 | 8 | None | 10 A |
| NX-OC4633 | NX-TBA082 | 8 | None | 10 A |
| | NX-TBB082 | 8 | None | 10 A |

## Applicable Wires

### Using Ferrules

If you use ferrules, attach the twisted wires to them.
Observe the application instructions for your ferrules for the wire stripping length when attaching ferrules.
Always use plated one-pin ferrules. Do not use unplated ferrules or two-pin ferrules.

The applicable ferrules, wires, and crimping tools are listed in the following table.

| Terminal type | Manufacturer | Ferrule model | Applicable wire ($mm^2$ (AWG)) | Crimping tool |
|---|---|---|---|---|
| Terminals other than ground terminals | Phoenix Contact | AI0,34-8 | 0.34 (#22) | Phoenix Contact (The figure in parentheses is the applicable wire size.) CRIMPFOX 6 (0.25 to 6 $mm^2$, AWG24 to 10) |
| | | AI0,5-8 | 0.5 (#20) | |
| | | AI0,5-10 | | |
| | | AI0,75-8 | 0.75 (#18) | |
| | | AI0,75-10 | | |
| | | AI1,0-8 | 1.0 (#18) | |
| | | AI1,0-10 | | |
| | | AI1,5-8 | 1.5 (#16) | |
| | | AI1,5-10 | | |
| Ground terminals | | AI2,5-10 | 2.0 * | |
| Terminals other than ground terminals | Weidmuller | H0.14/12 | 0.14 (#26) | Weidmuller (The figure in parentheses is the applicable wire size.) PZ6 Roto (0.14 to 6 $mm^2$, AWG 26 to 10) |
| | | H0.25/12 | 0.25 (#24) | |
| | | H0.34/12 | 0.34 (#22) | |
| | | H0.5/14 | 0.5 (#20) | |
| | | H0.5/16 | | |
| | | H0.75/14 | 0.75 (#18) | |
| | | H0.75/16 | | |
| | | H1.0/14 | 1.0 (#18) | |
| | | H1.0/16 | | |
| | | H1.5/14 | 1.5 (#16) | |
| | | H1.5/16 | | |

* Some AWG 14 wires exceed 2.0 $mm^2$ and cannot be used in the screwless clamping terminal block.

When you use any ferrules other than those in the above table, crimp them to the twisted wires so that the following processed dimensions are achieved.

Finished Dimensions of Ferrules

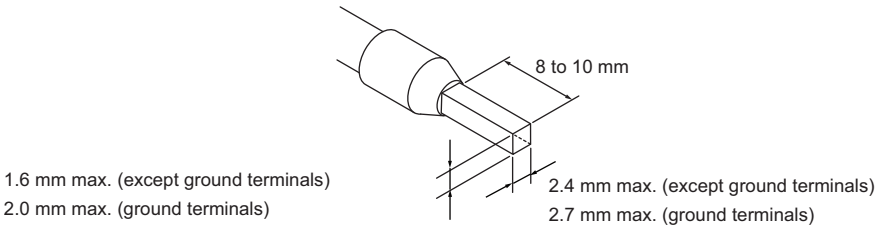


### Using Twisted Wires/Solid Wires

If you use the twisted wires or the solid wires, use the following table to determine the correct wire specifications.

| Terminals | | Wire type | | | | Wire size | Conductor length (stripping length) |
|---|---|---|---|---|---|---|---|
| | | Twisted wires | | Solid wire | | | |
| Classification | Current capacity | Plated | Unplated | Plated | Unplated | | |
| All terminals except ground terminals | 2 A or less | Possible | Possible | Possible | Possible | 0.08 to 1.5 $mm^2$ AWG28 to 16 | 8 to 10 mm |
| | Greater than 2 A and 4 A or less | | Not Possible | Possible *1 | Not Possible | | |
| | Greater than 4 A | Possible *1 | | Not Possible | | | |
| Ground terminals | --- | Possible | Possible | Possible *2 | Possible *2 | 2.0 $mm^2$ | 9 to 10 mm |

*1. Secure wires to the screwless clamping terminal block. Refer to the Securing Wires in the USER'S MANUAL for how to secure wires.
*2. With the NX-TB□□□1 Terminal Block, use twisted wires to connect the ground terminal. Do not use a solid wire.

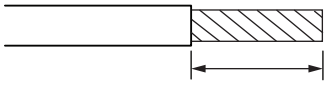

Conductor length (stripping length)

**<Additional Information>** If more than 2 A will flow on the wires, use plated wires or use ferrules.

## M3 Screw Terminal Block Type

### 30 mm Width

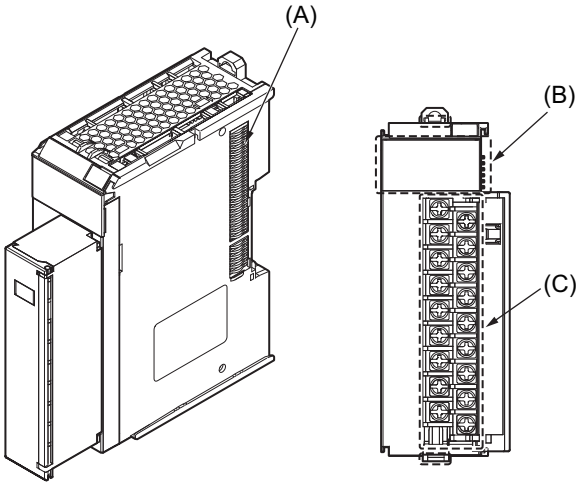


| Letter | Item | Specification |
|---|---|---|
| (A) | NX bus connector | This connector is used to connect to another Unit. |
| (B) | Indicators | The indicators show the current operating status of the Unit. |
| (C) | Screw terminals | These screw terminals are used to connect the wires. |

## MIL Connector Type (1 Connector with 20 terminals)

**30 mm Width**

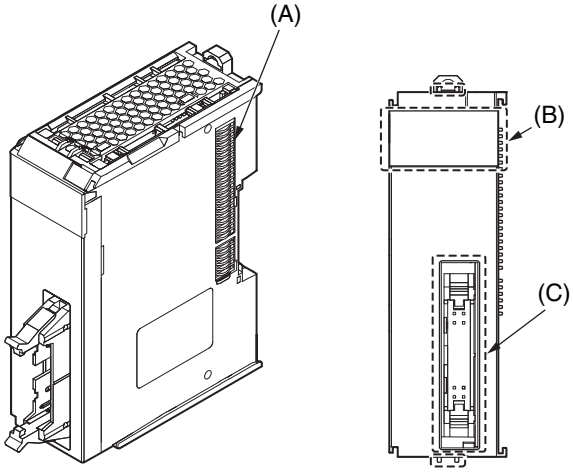


## MIL Connector Type (1 Connector with 40 terminals)

**30 mm Width**

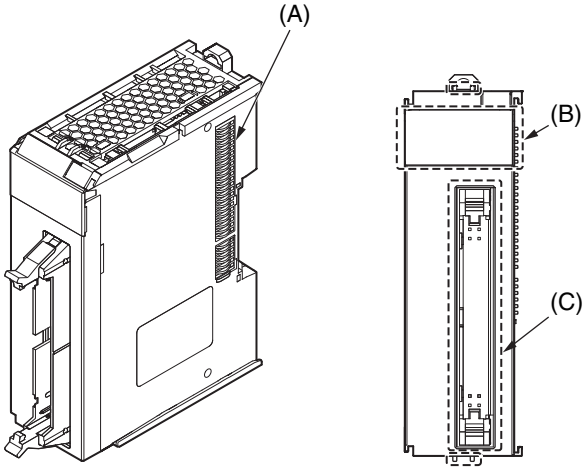


## MIL Connector Type (2 Connectors with 20 terminals)

**30 mm Width**

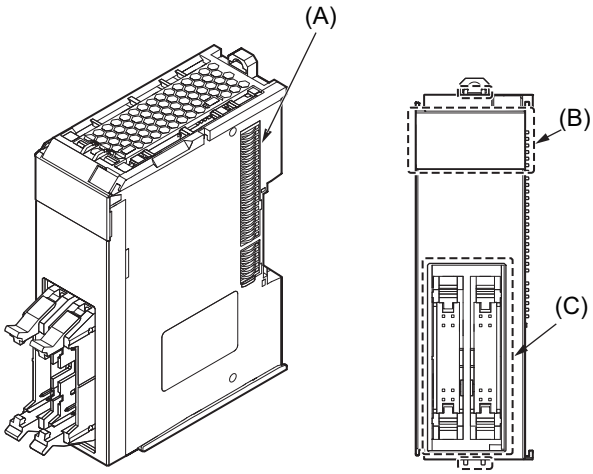


| Letter | Item | Specification |
|---|---|---|
| (A) | NX bus connector | This connector is used to connect to another Unit. |
| (B) | Indicators | The indicators show the current operating status of the Unit. |
| (C) | Connectors | The connectors are used to connect to external devices. |

## Fujitsu Connector Type (1 Connector with 40 terminals)

### 30 mm Width

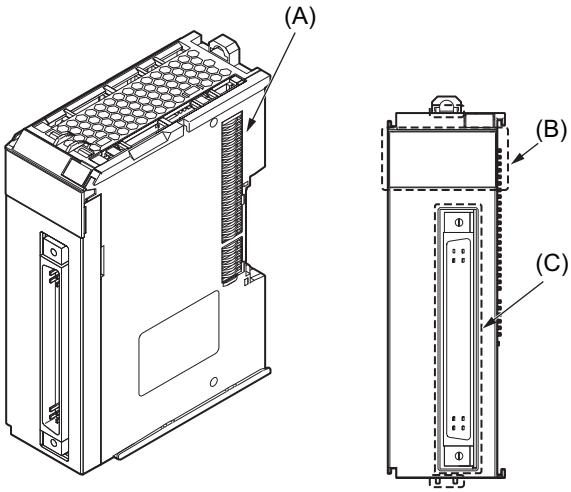


## Fujitsu Connector Type (2 Connectors with 24 terminals)

### 30 mm Width

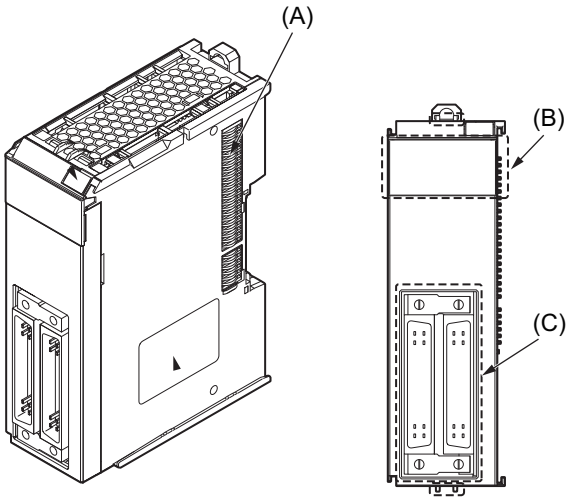


| Letter | Item | Specification |
|---|---|---|
| (A) | NX bus connector | This connector is used to connect to another Unit. |
| (B) | Indicators | The indicators show the current operating status of the Unit. |
| (C) | Connectors | The connectors are used to connect to external devices. |

# Dimensions

(Unit/mm)

## Screwless Clamping Terminal Block Type

### 12 mm Width

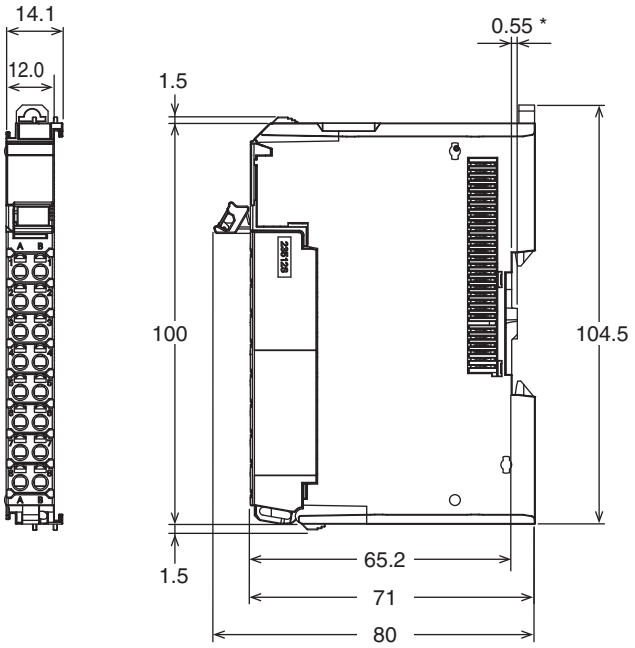


* The dimension is 1.35 mm for Units with lot numbers through December 2014.

### 24 mm Width

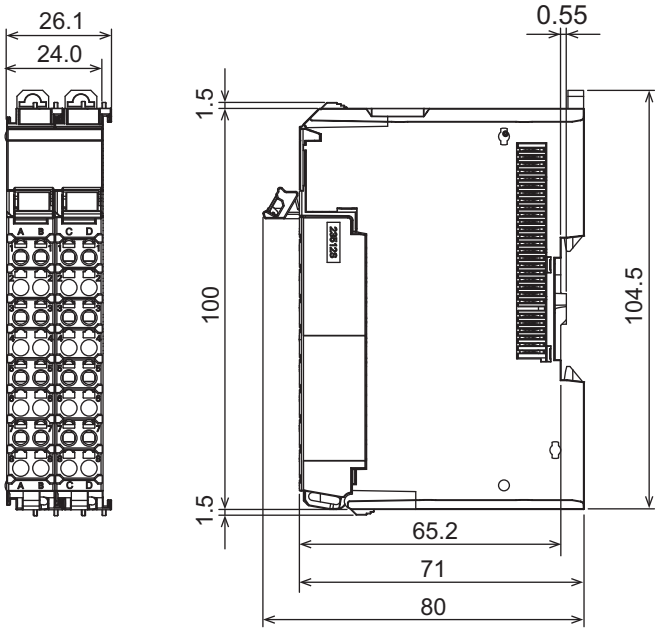

## M3 Screw Terminal Block Type

**30 mm Width**

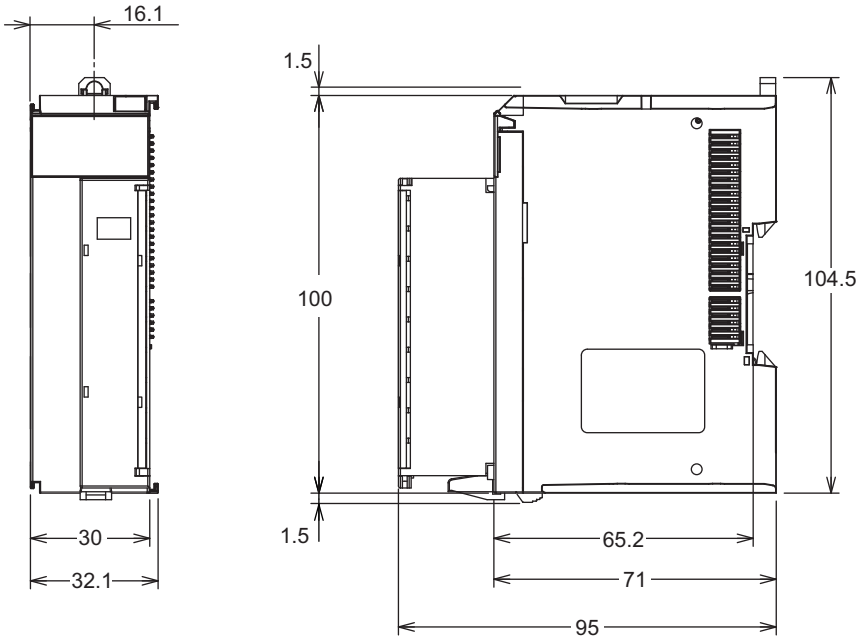


## MIL Connector Type (1 Connector with 20 terminals)

**30 mm Width**

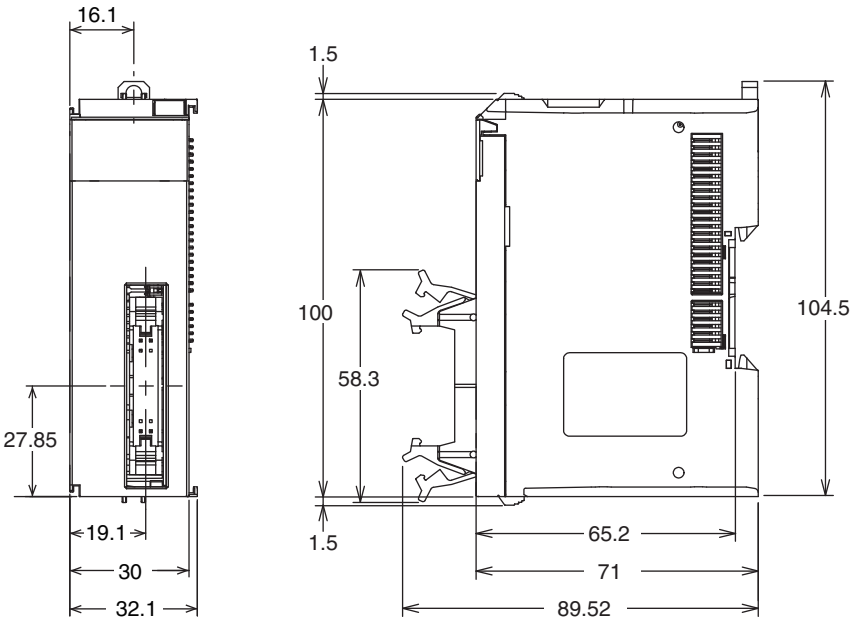

## MIL Connector Type (1 Connector with 40 terminals)

**30 mm Width**

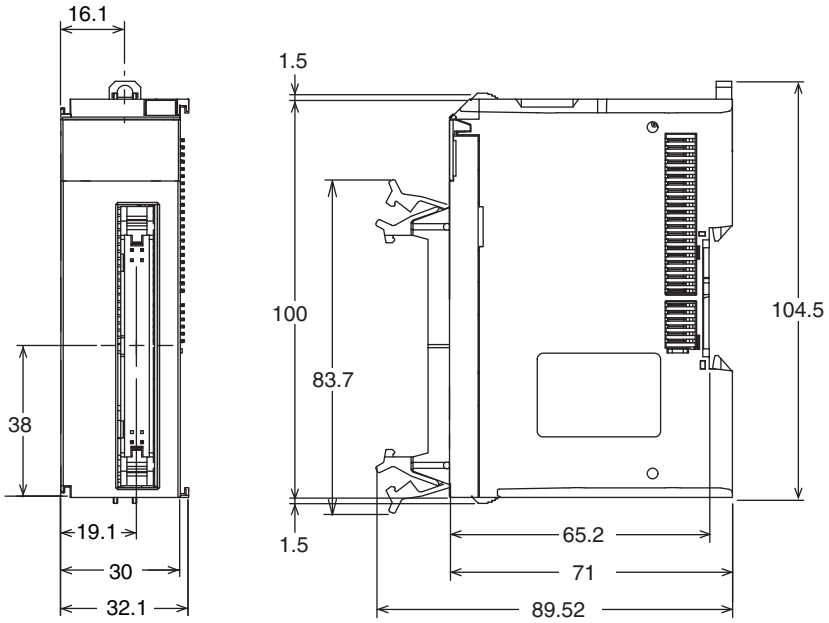


## MIL Connector Type (2 Connectors with 20 terminals)

**30 mm Width**

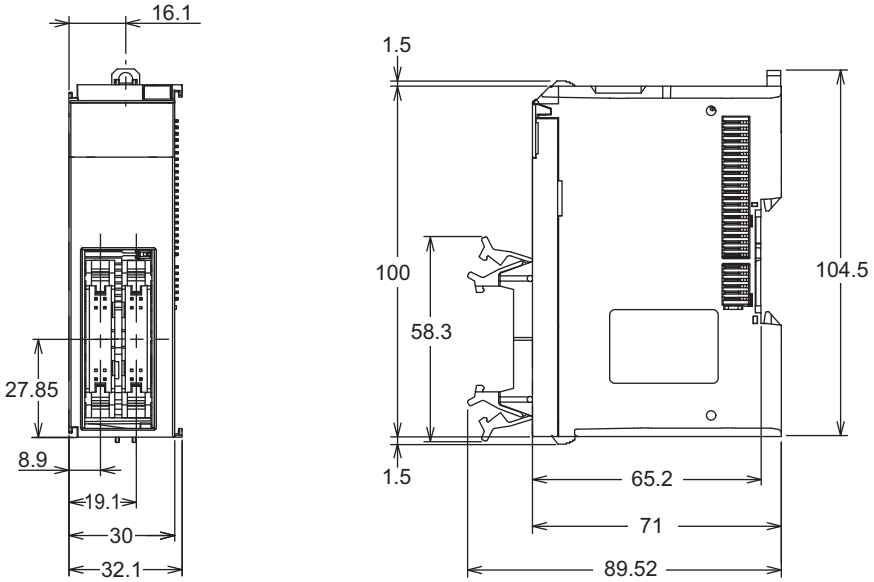

## Fujitsu Connector Type (1 Connector with 40 terminals)

**30 mm Width**

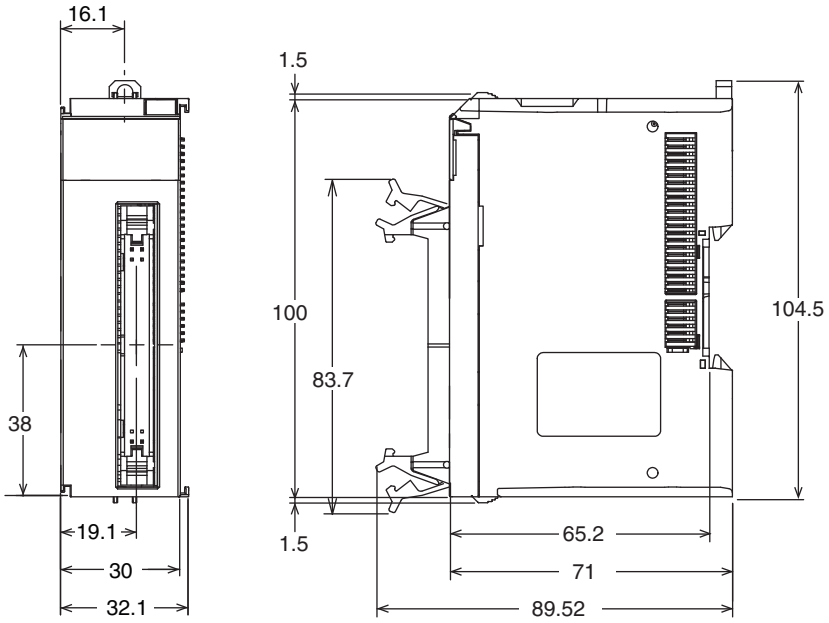


## Fujitsu Connector Type (2 Connectors with 24 terminals)

**30 mm Width**

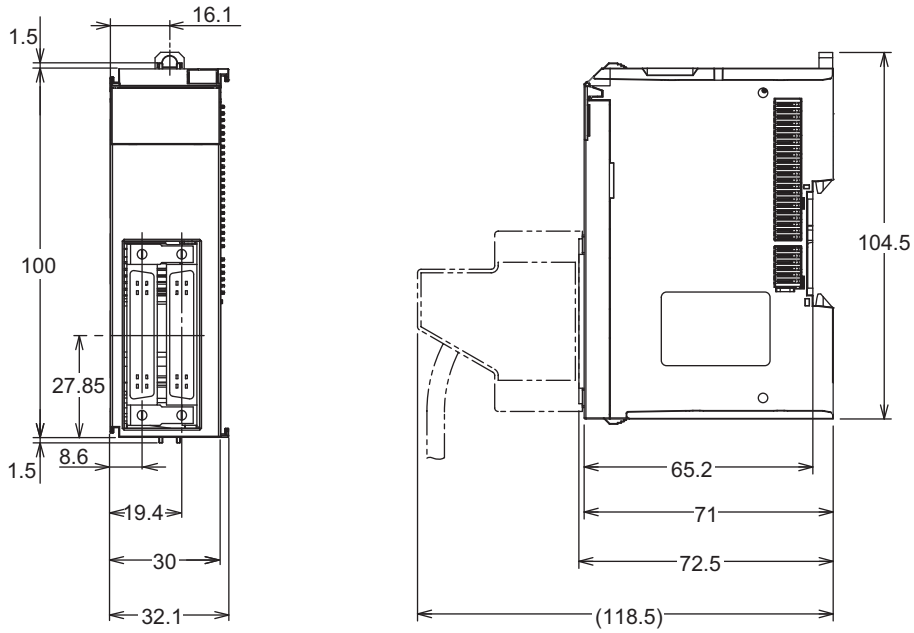


# Related Manual

| Cat. No. | Model number | Manual name | Application | Description |
|---|---|---|---|---|
| W521 | NX-ID□□□□<br>NX-IA□□□□<br>NX-OD□□□□<br>NX-OC□□□□<br>NX-MD□□□□ | NX-series Digital I/O Units User's Manual | Learning how to use NX-series Digital I/O Units | The hardware, setup methods, and functions of the NX-series Digital I/O Units are described. |

## Terms and Conditions Agreement

Read and understand this catalog.
Please read and understand this catalog before purchasing the products. Please consult your OMRON representative if you have any questions or comments.

Warranties.
(a) Exclusive Warranty. Omron's exclusive warranty is that the Products will be free from defects in materials and workmanship for a period of twelve months from the date of sale by Omron (or such other period expressed in writing by Omron). Omron disclaims all other warranties, express or implied.
(b) Limitations. OMRON MAKES NO WARRANTY OR REPRESENTATION, EXPRESS OR IMPLIED, ABOUT NON-INFRINGEMENT, MERCHANTABILITY OR FITNESS FOR A PARTICULAR PURPOSE OF THE PRODUCTS. BUYER ACKNOWLEDGES THAT IT ALONE HAS DETERMINED THAT THE
PRODUCTS WILL SUITABLY MEET THE REQUIREMENTS OF THEIR INTENDED USE.
Omron further disclaims all warranties and responsibility of any type for claims or expenses based on infringement by the Products or otherwise of any intellectual property right. (c) Buyer Remedy. Omron's sole obligation hereunder shall be, at Omron's election, to (i) replace (in the form originally shipped with Buyer responsible for labor charges for removal or replacement thereof) the non-complying Product, (ii) repair the non-complying Product, or (iii) repay or credit Buyer an amount equal to the purchase price of the non-complying Product; provided that in no event shall Omron be responsible for warranty, repair, indemnity or any other claims or expenses regarding the Products unless Omron's analysis confirms that the Products were properly handled, stored, installed and maintained and not subject to contamination, abuse, misuse or inappropriate modification. Return of any Products by Buyer must be approved in writing by Omron before shipment. Omron Companies shall not be liable for the suitability or unsuitability or the results from the use of Products in combination with any electrical or electronic components, circuits, system assemblies or any other materials or substances or environments. Any advice, recommendations or information given orally or in writing, are not to be construed as an amendment or addition to the above warranty.
See http://www.omron.com/global/ or contact your Omron representative for published information.

Limitation on Liability; Etc.
OMRON COMPANIES SHALL NOT BE LIABLE FOR SPECIAL, INDIRECT, INCIDENTAL, OR CONSEQUENTIAL DAMAGES, LOSS OF PROFITS OR PRODUCTION OR COMMERCIAL LOSS IN ANY WAY CONNECTED WITH THE PRODUCTS, WHETHER SUCH CLAIM IS BASED IN CONTRACT, WARRANTY, NEGLIGENCE OR STRICT LIABILITY.
Further, in no event shall liability of Omron Companies exceed the individual price of the Product on which liability is asserted.

Suitability of Use.
Omron Companies shall not be responsible for conformity with any standards, codes or regulations which apply to the combination of the Product in the Buyer's application or use of the Product. At Buyer's request, Omron will provide applicable third party certification documents identifying ratings and limitations of use which apply to the Product. This information by itself is not sufficient for a complete determination of the suitability of the Product in combination with the end product, machine, system, or other application or use. Buyer shall be solely responsible for determining appropriateness of the particular Product with respect to Buyer's application, product or system. Buyer shall take application responsibility in all cases.
NEVER USE THE PRODUCT FOR AN APPLICATION INVOLVING SERIOUS RISK TO LIFE OR PROPERTY OR IN LARGE QUANTITIES WITHOUT ENSURING THAT THE SYSTEM AS A WHOLE HAS BEEN DESIGNED TO ADDRESS THE RISKS, AND THAT THE OMRON PRODUCT(S) IS PROPERLY RATED AND INSTALLED FOR THE INTENDED USE WITHIN THE OVERALL EQUIPMENT OR SYSTEM.

Programmable Products.
Omron Companies shall not be responsible for the user's programming of a programmable Product, or any consequence thereof.

Performance Data.
Data presented in Omron Company websites, catalogs and other materials is provided as a guide for the user in determining suitability and does not constitute a warranty. It may represent the result of Omron's test conditions, and the user must correlate it to actual application requirements. Actual performance is subject to the Omron's Warranty and Limitations of Liability.

Change in Specifications.
Product specifications and accessories may be changed at any time based on improvements and other reasons. It is our practice to change part numbers when published ratings or features are changed, or when significant construction changes are made. However, some specifications of the Product may be changed without any notice. When in doubt, special part numbers may be assigned to fix or establish key specifications for your application. Please consult with your Omron's representative at any time to confirm actual specifications of purchased Product.

Errors and Omissions.
Information presented by Omron Companies has been checked and is believed to be accurate; however, no responsibility is assumed for clerical, typographical or proofreading errors or omissions.

2019.12

**In the interest of product improvement, specifications are subject to change without notice.**

**OMRON Corporation**
**Industrial Automation Company**

**http://www.ia.omron.com/**

(c)Copyright OMRON Corporation 2019 All Right Reserved.