Switch Mode Power Supply (15/25/35/50/75/100/150/200/350-W Models) S8FS-C

High Reliability at a Reasonable Cost. Reliable, Basic Power Supplies That Contribute to Stable Equipment Operation.

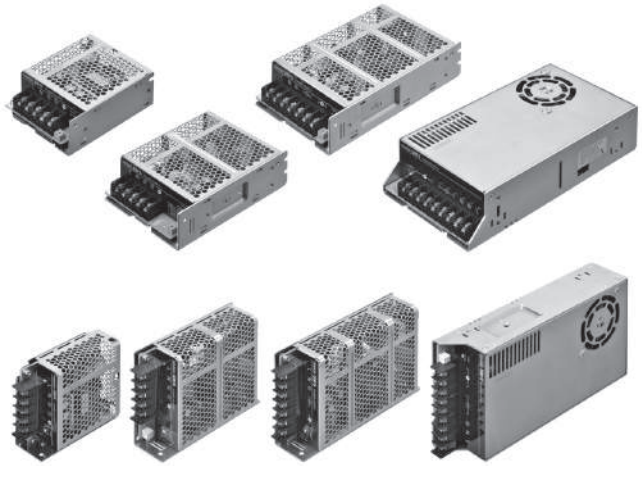

- High Reliability: Enhanced abnormal overvoltage resistance and lightning surge resistance for stable operation even with an unstable input voltage.
- Long Life: Japanese 105°C electrolytic capacitors are used to achieve stable quality and long life. A reliable 3-year warranty.*
- Wide Input Ranges: 100 to 120 VAC and 200 to 240 VAC
- Full Lineup: Models are available for the main output voltages and capacities used in FA applications.
- Global Standards: Conforms to CE (all models), Approved for UL (all models) and CCC (15 to 150-W models).
- Easy mounting to DIN Rails with Mounting Brackets.

*Refer to *Period and Terms of Warranty* on page 39.

⚠ **Refer to *Safety Precautions for All Power Supplies* and *Safety Precautions*** on page 36.

Product Lineup

Output voltage (VDC)	Power rating								
	15 W	25 W	35 W	50 W	75 W	100 W	150 W	200 W	350 W
5 V	Yes	Yes	Yes	Yes	Yes	Yes	Yes	Yes	Yes
12 V	Yes	Yes	Yes	Yes	Yes	Yes	Yes	Yes	Yes
15 V	Yes	Yes	Yes	Yes	Yes	Yes	Yes	---	---
24 V	Yes	Yes	Yes	Yes	Yes	Yes	Yes	Yes	Yes
36 V	---	---	---	---	---	Yes	Yes	Yes	Yes
48 V	---	---	---	Yes	Yes	Yes	Yes	Yes	Yes

Model Number Structure

Model Number Legend

Note: Not all combinations are possible. Refer to *List of Models* in *Ordering Information* on page 2.

S8FS-C□□□□□□
(1) (2) (3)

(1) Power Rating

Code	Power rating
015	15 W
025	25 W
035	35 W
050	50 W
075	75 W
100	100 W
150	150 W
200	200 W
350	350 W

(2) Output Voltage

Code	Output voltage (VDC)
05	5 V
12	12 V
15	15 V
24	24 V
36	36 V
48	48 V

(3) Configuration

Code	Terminal Block Direction	
Blank	Models with terminal block facing upward	
J	Models with terminal block facing forward	
D	Models with DIN rail	

Ordering Information

List of Models

Note: For details on normal stock models, contact your nearest OMRON representative.

Power rating	Input voltage	Output voltage (VDC)	Output current	Built-in fan	Model with terminal block facing upward	Model with terminal block facing forward	Model wtih DIN rail
15 W	100 to 240 VAC (allowable range: 85 to 264 VAC or 120 to 370 VDC ✻1)	5 V	3 A	None	---	**S8FS-C01505J**	**S8FS-C01505D**
		12 V	1.3 A			**S8FS-C01512J**	**S8FS-C01512D**
		15 V	1 A			**S8FS-C01515J**	**S8FS-C01515D**
		24 V	0.7 A			**S8FS-C01524J**	**S8FS-C01524D**
25 W		5 V	5 A		**S8FS-C02505**	**S8FS-C02505J**	**S8FS-C02505D**
		12 V	2.1 A		**S8FS-C02512**	**S8FS-C02512J**	**S8FS-C02512D**
		15 V	1.7 A		**S8FS-C02515**	**S8FS-C02515J**	**S8FS-C02515D**
		24 V	1.1 A		**S8FS-C02524**	**S8FS-C02524J**	**S8FS-C02524D**
35 W		5 V	7 A		**S8FS-C03505**	**S8FS-C03505J**	**S8FS-C03505D**
		12 V	3 A		**S8FS-C03512**	**S8FS-C03512J**	**S8FS-C03512D**
		15 V	2.4 A		**S8FS-C03515**	**S8FS-C03515J**	**S8FS-C03515D**
		24 V	1.5 A		**S8FS-C03524**	**S8FS-C03524J**	**S8FS-C03524D**
50 W		5 V	10 A		**S8FS-C05005**	**S8FS-C05005J**	**S8FS-C05005D**
		12 V	4.2 A		**S8FS-C05012**	**S8FS-C05012J**	**S8FS-C05012D**
		15 V	3.4 A		**S8FS-C05015**	**S8FS-C05015J**	**S8FS-C05015D**
		24 V	2.2 A		**S8FS-C05024**	**S8FS-C05024J**	**S8FS-C05024D**
		48 V	1.1 A		**S8FS-C05048**	**S8FS-C05048J**	**S8FS-C05048D**
75 W		5 V	14 A		**S8FS-C07505**	**S8FS-C07505J**	**S8FS-C07505D**
		12 V	6.2 A		**S8FS-C07512**	**S8FS-C07512J**	**S8FS-C07512D**
		15 V	5 A		**S8FS-C07515**	**S8FS-C07515J**	**S8FS-C07515D**
		24 V	3.2 A		**S8FS-C07524**	**S8FS-C07524J**	**S8FS-C07524D**
		48 V	1.6 A		**S8FS-C07548**	**S8FS-C07548J**	**S8FS-C07548D**
100 W	100 to 120 VAC, 200 to 240 VAC (allowable range: 85 to 132 VAC, 176 to 264 VAC, or 248 to 373 VDC (Select with the switch.) ✻2)	5 V	20 A		**S8FS-C10005**	**S8FS-C10005J**	**S8FS-C10005D**
		12 V	8.5 A		**S8FS-C10012**	**S8FS-C10012J**	**S8FS-C10012D**
		15 V	7 A		**S8FS-C10015**	**S8FS-C10015J**	**S8FS-C10015D**
		24 V	4.5 A		**S8FS-C10024**	**S8FS-C10024J**	**S8FS-C10024D**
		36 V	2.8 A		**S8FS-C10036**	**S8FS-C10036J**	**S8FS-C10036D**
		48 V	2.3 A		**S8FS-C10048**	**S8FS-C10048J**	**S8FS-C10048D**
150 W	100 to 120 VAC, 200 to 240 VAC (allowable range: 90 to 132 VAC, 180 to 264 VAC, or 254 to 373 VDC (Select with the switch.) ✻2)	5 V	26 A		**S8FS-C15005**	**S8FS-C15005J**	**S8FS-C15005D**
		12 V	12.5 A		**S8FS-C15012**	**S8FS-C15012J**	**S8FS-C15012D**
		15 V	10 A		**S8FS-C15015**	**S8FS-C15015J**	**S8FS-C15015D**
		24 V	6.5 A		**S8FS-C15024**	**S8FS-C15024J**	**S8FS-C15024D**
		36 V	4.3 A		**S8FS-C15036**	**S8FS-C15036J**	**S8FS-C15036D**
		48 V	3.3 A		**S8FS-C15048**	**S8FS-C15048J**	**S8FS-C15048D**
200 W		5 V	40 A		**S8FS-C20005**	**S8FS-C20005J**	**S8FS-C20005D**
		12 V	17 A		**S8FS-C20012**	**S8FS-C20012J**	**S8FS-C20012D**
		24 V	8.8 A		**S8FS-C20024**	**S8FS-C20024J**	**S8FS-C20024D**
		36 V	5.9 A		**S8FS-C20036**	**S8FS-C20036J**	**S8FS-C20036D**
		48 V	4.43 A		**S8FS-C20048**	**S8FS-C20048J**	**S8FS-C20048D**
350 W		5 V	60 A	Yes	**S8FS-C35005**	**S8FS-C35005J**	**S8FS-C35005D**
		12 V	29 A		**S8FS-C35012**	**S8FS-C35012J**	**S8FS-C35012D**
		24 V	14.6 A		**S8FS-C35024**	**S8FS-C35024J**	**S8FS-C35024D**
		36 V	9.7 A		**S8FS-C35036**	**S8FS-C35036J**	**S8FS-C35036D**
		48 V	7.32 A		**S8FS-C35048**	**S8FS-C35048J**	**S8FS-C35048D**

Note: You can use brackets that are sold separately to mount the Power Supplies to DIN Rail. Refer to *Mounting Brackets (Order Separately)* on page 29.

✻1. The range for compliance with EC Directives and safety standards (UL, EN, etc.) is 100 to 240 VAC.

✻2. The range for compliance with EC Directives and safety standards (UL, EN, etc.) is 100 to 120 VAC, 200 to 240 VAC.

Ratings, Characteristics, and Functions

Item		Power rating / Output voltage (VDC)	15 W			
			5 V	12 V	15 V	24 V
Efficiency ✻		115 VAC input	80% typ.	84% typ.	84% typ.	85% typ.
		230 VAC input	82% typ.	85% typ.	86% typ.	87% typ.
Input	Voltage range ✻		Single phase 85 to 264 VAC, 120 to 370 VDC (The L terminal for the DC input is the positive side and safety standards do not apply.) (Derating is required according to the input voltage. Refer to *Derating Curves* on page 18.)			
	Frequency ✻		50 /60 Hz (47 to 450 Hz)			
	Current ✻	115 VAC input	0.3 A typ.			
		230 VAC input	0.19 A typ.			
	Power factor		---			
	Leakage current	115 VAC input	0.05 mA	0.05 mA	0.05 mA	0.05 mA
		230 VAC input	0.10 mA	0.10 mA	0.10 mA	0.10 mA
	Inrush current ✻ (for a cold start at 25°)	115 VAC input	16 A typ.			
		230 VAC input	32 A typ.			
Output	Rated Output Current		3 A	1.3 A	1 A	0.7 A
	Voltage adjustment range ✻		–10% to 10% (with V. ADJ)			
	Ripple & Noise voltage ✻	100 to 240 VAC input	30 mVp-p max.	30 mVp-p max.	40 mVp-p max.	30 mVp-p max.
	Input variation influence ✻		0.5% max.			
	Load variation influence ✻		1.0% max.			
	Temperature variation influence	100 to 240 VAC input	0.03%/°C max.			
	Startup time ✻	115 VAC input	490 ms typ.	500 ms typ.	470 ms typ.	480 ms typ.
		230 VAC input	470 ms typ.	480 ms typ.	450 ms typ.	460 ms typ.
	Hold time ✻	115 VAC input	14 ms typ.	16 ms typ.	18 ms typ.	15 ms typ.
		230 VAC input	83 ms typ.	87 ms typ.	92 ms typ.	79 ms typ.
Additional functions	Overload protection		Yes, automatic reset			
	Overvoltage protection ✻		Yes, 115% or higher of rated output voltage, power shut off (shut off the input voltage and turn on the input again)			
	Overheat protection		No			
	Series operation		Yes (For up to 2 Power Supplies, external diodes are required.)			
	Parallel operation		No (However, backup operation is possible, external diodes are required.)			
	Remote sensing		No			
	Remote control		No			
	Output indicator		Yes (LED: Green)			
Insulation	Withstand voltage		3 kVAC for 1 min. (between all input terminals and output terminals) current cutoff 20 mA			
			2 kVAC for 1 min. (between all input terminals and PE terminals) current cutoff 20 mA			
			1 kVAC for 1 min. (between all output terminals and PE terminals) current cutoff 20 mA			
	Insulation resistance		100 MΩ min. (between all output terminals and all input terminals/PE terminals) at 500 VDC			
Environment	Ambient operating temperature		–20 to 60°C (Derating is required according to the temperature. Refer to *Derating Curves* on page 17.) (with no condensation or icing)			
	Storage temperature		–40 to 85°C (with no condensation or icing)			
	Ambient operating humidity		20% to 90% (Storage humidity: 10% to 95%)			
	Vibration resistance		10 to 55 Hz, 0.375-mm half amplitude for 2 h each in X, Y, and Z directions 10 to 500 Hz, 0.26-mm half amplitude for 1 h each in X, Y, and Z directions			
	Shock resistance		150 m/s², 3 times each in ±X, ±Y, ±Z directions			
Reliability	MTBF		135,000 hrs min.			
	Life expectancy ✻		10 years min.			
Construction	Dimensions (W×H×D)		Refer to *Dimensions* on page 23.			
	Weight		150 g max.			
	Cooling fan		No			
	Degree of protection		---			
Standards	Harmonic current emissions		Conforms to EN 61000-3-2, GB17625.1			
	EMI	Conducted Emissions	Conforms to EN 61204-3 Class B, EN 55011 Class B, GB9254			
		Radiated Emissions	Conforms to EN 61204-3 Class B, EN 55011 Class B, GB9254			
	EMS		Conforms to EN 61204-3 high severity levels			
	Safety Standards		Approved Standards UL : cURus UL 62368-1 (Recognition) OVC II Pol2 CSA: cURus C22.2 No62368-1 CCC: GB4943 Conformed Standards EN: EN 62368-1 OVC II Pol2 EAC (TR CU 004 / 2011, TR CU 020 / 2011) RCM (EN61000-6-4)			
	Marine Standards		No			
	SEMI		No			

✻ Refer to *Conditions* on page 12.

Item		Power rating / Output voltage (VDC)	25 W			
			5 V	12 V	15 V	24 V
Efficiency ✱		115 VAC input	80% typ.	84% typ.	85% typ.	86% typ.
		230 VAC input	82% typ.	86% typ.	88% typ.	88% typ.
Input	Voltage range ✱		Single phase 85 to 264 VAC, 120 to 370 VDC (The L terminal for the DC input is the positive side and safety standards do not apply.) (Derating is required according to the input voltage. Refer to *Derating Curves* on page 18.)			
	Frequency ✱		50 /60 Hz (47 to 450 Hz)			
	Current ✱	115 VAC input	0.49 A typ.			
		230 VAC input	0.3 A typ.			
	Power factor		---			
	Leakage current	115 VAC input	0.10 mA	0.10 mA	0.10 mA	0.10 mA
		230 VAC input	0.20 mA	0.20 mA	0.20 mA	0.20 mA
	Inrush current ✱ (for a cold start at 25°)	115 VAC input	16 A typ.			
		230 VAC input	32 A typ.			
Output	Rated Output Current		5 A	2.1 A	1.7 A	1.1 A
	Voltage adjustment range ✱		–10% to 10% (with V. ADJ)			
	Ripple & Noise voltage ✱	100 to 240 VAC input	20 mVp-p max.	20 mVp-p max.	30 mVp-p max.	40 mVp-p max.
	Input variation influence ✱		0.5% max.			
	Load variation influence ✱		1.0% max.			
	Temperature variation influence	100 to 240 VAC input	0.03%/°C max.			
	Startup time ✱	115 VAC input	390 ms typ.	340 ms typ.	400 ms typ.	360 ms typ.
		230 VAC input	360 ms typ.	350 ms typ.	400 ms typ.	360 ms typ.
	Hold time ✱	115 VAC input	17 ms typ.	22 ms typ.	23 ms typ.	21 ms typ.
		230 VAC input	103 ms typ.	113 ms typ.	117 ms typ.	112 ms typ.
Additional functions	Overload protection		Yes, automatic reset			
	Overvoltage protection ✱		Yes, 115% or higher of rated output voltage, power shut off (shut off the input voltage and turn on the input again)			
	Overheat protection		No			
	Series operation		Yes (For up to 2 Power Supplies, external diodes are required.)			
	Parallel operation		No (However, backup operation is possible, external diodes are required.)			
	Remote sensing		No			
	Remote control		No			
	Output indicator		Yes (LED: Green)			
Insulation	Withstand voltage		3 kVAC for 1 min. (between all input terminals and output terminals) current cutoff 20 mA			
			2 kVAC for 1 min. (between all input terminals and PE terminals) current cutoff 20 mA			
			1 kVAC for 1 min. (between all output terminals and PE terminals) current cutoff 20 mA			
	Insulation resistance		100 MΩ min. (between all output terminals and all input terminals/PE terminals) at 500 VDC			
Environment	Ambient operating temperature		–20 to 60°C (Derating is required according to the temperature. Refer to *Derating Curves* on page 17.) (with no condensation or icing)			
	Storage temperature		–40 to 85°C (with no condensation or icing)			
	Ambient operating humidity		20% to 90% (Storage humidity: 10% to 95%)			
	Vibration resistance		10 to 55 Hz, 0.375-mm half amplitude for 2 h each in X, Y, and Z directions 10 to 500 Hz, 0.26-mm half amplitude for 1 h each in X, Y, and Z directions			
	Shock resistance		150 m/s², 3 times each in ±X, ±Y, ±Z directions			
Reliability	MTBF		135,000 hrs min.			
	Life expectancy ✱		10 years min.			
Construction	Dimensions (W×H×D)		Refer to *Dimensions* on pages 20 and 23.			
	Weight		250 g max.			
	Cooling fan		No			
	Degree of protection		---			
Standards	Harmonic current emissions		Conforms to EN 61000-3-2, GB17625.1			
	EMI	Conducted Emissions	Conforms to EN 61204-3 Class B, EN 55011 Class B, GB9254			
		Radiated Emissions	Conforms to EN 61204-3 Class B, EN 55011 Class B, GB9254			
	EMS		Conforms to EN 61204-3 high severity levels			
	Safety Standards		Approved Standards UL : cURus UL 62368-1 (Recognition) OVC II Pol2 CSA: cURus C22.2 No62368-1 CCC: GB4943 Conformed Standards EN: EN 62368-1 OVC II Pol2 EAC (TR CU 004 / 2011, TR CU 020 / 2011) RCM (EN61000-6-4)			
	Marine Standards		No			
	SEMI		No			

✱ Refer to *Conditions* on page 12.

Item		Power rating / Output voltage (VDC)	35 W			
			5 V	12 V	15 V	24 V
Efficiency ✱		115 VAC input	81% typ.	83% typ.	84% typ.	87% typ.
		230 VAC input	81% typ.	84% typ.	84% typ.	87% typ.
Input	Voltage range ✱		Single phase 85 to 264 VAC, 120 to 370 VDC (The L terminal for the DC input is the positive side and safety standards do not apply.) (Derating is required according to the input voltage. Refer to *Derating Curves* on page 18.)			
	Frequency ✱		50 /60 Hz (47 to 450 Hz)			
	Current ✱	115 VAC input	0.66 A typ.			
		230 VAC input	0.41 A typ.			
	Power factor		---			
	Leakage current	115 VAC input	0.15 mA	0.15 mA	0.15 mA	0.15 mA
		230 VAC input	0.30 mA	0.25 mA	0.25 mA	0.25 mA
	Inrush current ✱ (for a cold start at 25°)	115 VAC input	16 A typ.			
		230 VAC input	32 A typ.			
Output	Rated Output Current		7 A	3 A	2.4 A	1.5 A
	Voltage adjustment range ✱		–10% to 10% (with V. ADJ)			
	Ripple & Noise voltage ✱	100 to 240 VAC input	80 mVp-p max.	90 mVp-p max.	90 mVp-p max.	80 mVp-p max.
	Input variation influence ✱		0.5% max.			
	Load variation influence ✱		1.0% max.			
	Temperature variation influence	100 to 240 VAC input	0.03%/°C max.			
	Startup time ✱	115 VAC input	750 ms typ.	750 ms typ.	760 ms typ.	770 ms typ.
		230 VAC input	700 ms typ.	690 ms typ.	710 ms typ.	720 ms typ.
	Hold time ✱	115 VAC input	13 ms typ.	14 ms typ.	14 ms typ.	15 ms typ.
		230 VAC input	74 ms typ.	75 ms typ.	75 ms typ.	79 ms typ.
Additional functions	Overload protection		Yes, automatic reset			
	Overvoltage protection ✱		Yes, 115% or higher of rated output voltage, power shut off (shut off the input voltage and turn on the input again)			
	Overheat protection		No			
	Series operation		Yes (For up to 2 Power Supplies, external diodes are required.)			
	Parallel operation		No (However, backup operation is possible, external diodes are required.)			
	Remote sensing		No			
	Remote control		No			
	Output indicator		Yes (LED: Green)			
Insulation	Withstand voltage		3 kVAC for 1 min. (between all input terminals and output terminals) current cutoff 20 mA			
			2 kVAC for 1 min. (between all input terminals and PE terminals) current cutoff 20 mA			
			1 kVAC for 1 min. (between all output terminals and PE terminals) current cutoff 20 mA			
	Insulation resistance		100 MΩ min. (between all output terminals and all input terminals/PE terminals) at 500 VDC			
Environment	Ambient operating temperature		–20 to 60°C (Derating is required according to the temperature. Refer to *Derating Curves* on page 17.) (with no condensation or icing)			
	Storage temperature		–40 to 85°C (with no condensation or icing)			
	Ambient operating humidity		20% to 90% (Storage humidity: 10% to 95%)			
	Vibration resistance		10 to 55 Hz, 0.375-mm half amplitude for 2 h each in X, Y, and Z directions 10 to 500 Hz, 0.26-mm half amplitude for 1 h each in X, Y, and Z directions			
	Shock resistance		150 m/s², 3 times each in ±X, ±Y, ±Z directions			
Reliability	MTBF		135,000 hrs min.			
	Life expectancy ✱		10 years min.			
Construction	Dimensions (W×H×D)		Refer to *Dimensions* on pages 20 and 23.			
	Weight		250 g max.			
	Cooling fan		No			
	Degree of protection		---			
Standards	Harmonic current emissions		Conforms to EN 61000-3-2, GB17625.1			
	EMI	Conducted Emissions	Conforms to EN 61204-3 Class B, EN 55011 Class B, GB9254			
		Radiated Emissions	Conforms to EN 61204-3 Class B, EN 55011 Class B, GB9254			
	EMS		Conforms to EN 61204-3 high severity levels			
	Safety Standards		Approved Standards UL : cURus UL 62368-1 (Recognition) OVC II Pol2 CSA: cURus C22.2 No62368-1 CCC: GB4943 Conformed Standards EN: EN 62368-1 OVC II Pol2 EAC (TR CU 004 / 2011, TR CU 020 / 2011) RCM (EN61000-6-4)			
	Marine Standards		No			
	SEMI		No			

✱ Refer to *Conditions* on page 12.

Item		Power rating / Output voltage (VDC)	50 W				
			5 V	12 V	15 V	24 V	48 V
Efficiency ✱		115 VAC input	79% typ.	83% typ.	84% typ.	86% typ.	87% typ.
		230 VAC input	80% typ.	84% typ.	85% typ.	86% typ.	87% typ.
Input	Voltage range ✱		Single phase 85 to 264 VAC, 120 to 370 VDC (The L terminal for the DC input is the positive side and safety standards do not apply.) (Derating is required according to the input voltage. Refer to *Derating Curves* on page 18.)				
	Frequency ✱		50 /60 Hz (47 to 450 Hz)				
	Current ✱	115 VAC input	0.97 A typ.				
		230 VAC input	0.59 A typ.				
	Power factor		---				
	Leakage current	115 VAC input	0.25 mA	0.25 mA	0.25 mA	0.25 mA	0.25 mA
		230 VAC input	0.60 mA	0.55 mA	0.55 mA	0.55 mA	0.55 mA
	Inrush current ✱ (for a cold start at 25°)	115 VAC input	16 A typ.				
		230 VAC input	32 A typ.				
Output	Rated Output Current		10 A	4.2 A	3.4 A	2.2 A	1.1 A
	Voltage adjustment range ✱		−10% to 10% (with V. ADJ)				
	Ripple & Noise voltage ✱	100 to 240 VAC input	80 mVp-p max.	110 mVp-p max.	100 mVp-p max.	100 mVp-p max.	120 mVp-p max.
	Input variation influence ✱		0.5% max.				
	Load variation influence ✱		1.0% max.				
	Temperature variation influence	100 to 240 VAC input	0.03%/°C max.				
	Startup time ✱	115 VAC input	730 ms typ.	730 ms typ.	710 ms typ.	710 ms typ.	770 ms typ.
		230 VAC input	680 ms typ.	670 ms typ.	610 ms typ.	640 ms typ.	690 ms typ.
	Hold time ✱	115 VAC input	12 ms typ.	14 ms typ.	14 ms typ.	14 ms typ.	14 ms typ.
		230 VAC input	71 ms typ.	77 ms typ.	78 ms typ.	77 ms typ.	80 ms typ.
Additional functions	Overload protection		Yes, automatic reset				
	Overvoltage protection ✱		Yes, 115% or higher of rated output voltage, power shut off (shut off the input voltage and turn on the input again)				
	Overheat protection		No				
	Series operation		Yes (For up to 2 Power Supplies, external diodes are required.)				
	Parallel operation		No (However, backup operation is possible, external diodes are required.)				
	Remote sensing		No				
	Remote control		No				
	Output indicator		Yes (LED: Green)				
Insulation	Withstand voltage		3 kVAC for 1 min. (between all input terminals and output terminals) current cutoff 20 mA				
			2 kVAC for 1 min. (between all input terminals and PE terminals) current cutoff 20 mA				
			1 kVAC for 1 min. (between all output terminals and PE terminals) current cutoff 20 mA				
	Insulation resistance		100 MΩ min. (between all output terminals and all input terminals/PE terminals) at 500 VDC				
Environment	Ambient operating temperature		−20 to 60°C (Derating is required according to the temperature. Refer to *Derating Curves* on page 17.) (with no condensation or icing)				
	Storage temperature		−40 to 85°C (with no condensation or icing)				
	Ambient operating humidity		20% to 90% (Storage humidity: 10% to 95%)				
	Vibration resistance		10 to 55 Hz, 0.375-mm half amplitude for 2 h each in X, Y, and Z directions 10 to 500 Hz, 0.26-mm half amplitude for 1 h each in X, Y, and Z directions				
	Shock resistance		150 m/s^2, 3 times each in ±X, ±Y, ±Z directions				
Reliability	MTBF		135,000 hrs min.				
	Life expectancy ✱		10 years min.				
Construction	Dimensions (W×H×D)		Refer to *Dimensions* on pages 20 and 24.				
	Weight		300 g max.				
	Cooling fan		No				
	Degree of protection		---				
Standards	Harmonic current emissions		Conforms to EN 61000-3-2, GB17625.1				
	EMI	Conducted Emissions	Conforms to EN 61204-3 Class B, EN 55011 Class B, GB9254				
		Radiated Emissions	Conforms to EN 61204-3 Class B, EN 55011 Class B, GB9254				
	EMS		Conforms to EN 61204-3 high severity levels				
	Safety Standards		Approved Standards UL : cURus UL 62368-1 (Recognition) OVC II Pol2 CSA: cURus C22.2 No62368-1 CCC: GB4943 Conformed Standards EN: EN 62368-1 OVC II Pol2 EAC (TR CU 004 / 2011, TR CU 020 / 2011) RCM (EN61000-6-4)				
	Marine Standards		No				
	SEMI		No				

✱ Refer to *Conditions* on page 12.

Item		Power rating / Output voltage (VDC)	75 W				
			5 V	12 V	15 V	24 V	48 V
Efficiency ✱		115 VAC input	75% typ.	83% typ.	84% typ.	87% typ.	87% typ.
		230 VAC input	77% typ.	83% typ.	84% typ.	87% typ.	87% typ.
Input	Voltage range ✱		Single phase 85 to 264 VAC, 120 to 370 VDC (The L terminal for the DC input is the positive side and safety standards do not apply.) (Derating is required according to the input voltage. Refer to *Derating Curves* on page 18.)				
	Frequency ✱		50 /60 Hz (47 to 450 Hz)				
	Current ✱	115 VAC input	1.4 A typ.				
		230 VAC input	0.83 A typ.				
	Power factor		---				
	Leakage current	115 VAC input	0.25 mA	0.25 mA	0.25 mA	0.25 mA	0.25 mA
		230 VAC input	0.60 mA	0.60 mA	0.60 mA	0.60 mA	0.60 mA
	Inrush current ✱ (for a cold start at 25°)	115 VAC input	16 A typ.				
		230 VAC input	32 A typ.				
Output	Rated Output Current		14 A	6.2 A	5 A	3.2 A	1.6 A
	Voltage adjustment range ✱		–10% to 10% (with V. ADJ)				
	Ripple & Noise voltage ✱	100 to 240 VAC input	80 mVp-p max.	110 mVp-p max.	90 mVp-p max.	110 mVp-p max.	140 mVp-p max.
	Input variation influence ✱		0.5% max.				
	Load variation influence ✱		1.0% max.				
	Temperature variation influence	100 to 240 VAC input	0.03%/°C max.				
	Startup time ✱	115 VAC input	750 ms typ.	720 ms typ.	730 ms typ.	750 ms typ.	700 ms typ.
		230 VAC input	710 ms typ.	680 ms typ.	690 ms typ.	690 ms typ.	730 ms typ.
	Hold time ✱	115 VAC input	12 ms typ.	13 ms typ.	13 ms typ.	14 ms typ.	15 ms typ.
		230 VAC input	75 ms typ.	74 ms typ.	74 ms typ.	76 ms typ.	78 ms typ.
Additional functions	Overload protection		Yes, automatic reset				
	Overvoltage protection ✱		Yes, 115% or higher of rated output voltage, power shut off (shut off the input voltage and turn on the input again)				
	Overheat protection		No				
	Series operation		Yes (For up to 2 Power Supplies, external diodes are required.)				
	Parallel operation		No (However, backup operation is possible, external diodes are required.)				
	Remote sensing		No				
	Remote control		No				
	Output indicator		Yes (LED: Green)				
Insulation	Withstand voltage		3 kVAC for 1 min. (between all input terminals and output terminals) current cutoff 20 mA				
			2 kVAC for 1 min. (between all input terminals and PE terminals) current cutoff 20 mA				
			1 kVAC for 1 min. (between all output terminals and PE terminals) current cutoff 20 mA				
	Insulation resistance		100 MΩ min. (between all output terminals and all input terminals/PE terminals) at 500 VDC				
Environment	Ambient operating temperature		–20 to 60°C (Derating is required according to the temperature. Refer to *Derating Curves* on page 17.) (with no condensation or icing)				
	Storage temperature		–40 to 85°C (with no condensation or icing)				
	Ambient operating humidity		20% to 90% (Storage humidity: 10% to 95%)				
	Vibration resistance		10 to 55 Hz, 0.375-mm half amplitude for 2 h each in X, Y, and Z directions 10 to 500 Hz, 0.26-mm half amplitude for 1 h each in X, Y, and Z directions				
	Shock resistance		150 m/s², 3 times each in ±X, ±Y, ±Z directions				
Reliability	MTBF		135,000 hrs min.				
	Life expectancy ✱		10 years min.				
Construction	Dimensions (W×H×D)		Refer to *Dimensions* on pages 21 and 24.				
	Weight		350 g max.				
	Cooling fan		No				
	Degree of protection		---				
Standards	Harmonic current emissions		Conforms to EN 61000-3-2, GB17625.1				
	EMI	Conducted Emissions	Conforms to EN 61204-3 Class B, EN 55011 Class B, GB9254				
		Radiated Emissions	Conforms to EN 61204-3 Class B, EN 55011 Class B, GB9254				
	EMS		Conforms to EN 61204-3 high severity levels				
	Safety Standards		Approved Standards UL : cURus UL 62368-1 (Recognition) OVC II Pol2 CSA: cURus C22.2 No62368-1 CCC: GB4943 Conformed Standards EN: EN 62368-1 OVC II Pol2 EAC (TR CU 004 / 2011, TR CU 020 / 2011) RCM (EN61000-6-4)				
	Marine Standards		No				
	SEMI		No				

✱ Refer to *Conditions* on page 12.

Item		Power rating / Output voltage (VDC)	100 W					
			5 V	12 V	15 V	24 V	36 V	48 V
Efficiency ✱		115 VAC input	80% typ.	82% typ.	83% typ.	85% typ.	86% typ.	87% typ.
		230 VAC input	81% typ.	83% typ.	84% typ.	87% typ.	87% typ.	88% typ.
Input	Voltage range ✱		Single phase 85 to 132 VAC, 176 to 264 VAC, 248 to 373 VDC Select with the switch. (The L terminal for the DC input is the positive side and safety standards do not apply.) (Derating is required according to the input voltage. Refer to *Derating Curves* on page 18.)					
	Frequency ✱		50 /60 Hz (47 to 450 Hz)					
	Current ✱	115 VAC input	2 A typ.					
		230 VAC input	1.1 A typ.					
	Power factor		---					
	Leakage current	115 VAC input	0.35 mA	0.35 mA	0.35 mA	0.35 mA	0.40 mA	0.40 mA
		230 VAC input	0.60 mA	0.55 mA	0.60 mA	0.50 mA	0.60 mA	0.60 mA
	Inrush current ✱ (for a cold start at 25°)	115 VAC input	32 A typ.					
		230 VAC input	32 A typ.					
Output	Rated Output Current		20 A	8.5 A	7 A	4.5 A	2.8 A	2.3 A
	Voltage adjustment range ✱		–10% to 10% (with V. ADJ)					
	Ripple & Noise voltage ✱	100 to 120 VAC/200 to 240 VAC input	70 mVp-p max.	100 mVp-p max.	70 mVp-p max.	120 mVp-p max.	90 mVp-p max.	120 mVp-p max.
	Input variation influence ✱		0.5% max.					
	Load variation influence ✱		1.0% max.					
	Temperature variation influence	100 to 120 VAC/200 to 240 VAC input	0.03%/°C max.					
	Startup time ✱	115 VAC input	710 ms typ.	440 ms typ.	440 ms typ.	430 ms typ.	450 ms typ.	430 ms typ.
		230 VAC input	720 ms typ.	700 ms typ.	720 ms typ.	660 ms typ.	690 ms typ.	660 ms typ.
	Hold time ✱	115 VAC input	23 ms typ.	37 ms typ.	36 ms typ.	34 ms typ.	36 ms typ.	34 ms typ.
		230 VAC input	29 ms typ.	40 ms typ.	39 ms typ.	39 ms typ.	41 ms typ.	38 ms typ.
Additional functions	Overload protection		Yes, automatic reset					
	Overvoltage protection ✱		Yes, 115% or higher of rated output voltage, power shut off (shut off the input voltage and turn on the input again)					
	Overheat protection		No					
	Series operation		Yes (For up to 2 Power Supplies, external diodes are required.)					
	Parallel operation		No (However, backup operation is possible, external diodes are required.)					
	Remote sensing		No					
	Remote control		No					
	Output indicator		Yes (LED: Green)					
Insulation	Withstand voltage		3 kVAC for 1 min. (between all input terminals and output terminals) current cutoff 20 mA					
			2 kVAC for 1 min. (between all input terminals and PE terminals) current cutoff 20 mA					
			1 kVAC for 1 min. (between all output terminals and PE terminals) current cutoff 20 mA					
	Insulation resistance		100 MΩ min. (between all output terminals and all input terminals/PE terminals) at 500 VDC					
Environment	Ambient operating temperature		–20 to 60°C (Derating is required according to the temperature. Refer to *Derating Curves* on page 17.) (with no condensation or icing)					
	Storage temperature		–40 to 85°C (with no condensation or icing)					
	Ambient operating humidity		20% to 90% (Storage humidity: 10% to 95%)					
	Vibration resistance		10 to 55 Hz, 0.375-mm half amplitude for 2 h each in X, Y, and Z directions 10 to 500 Hz, 0.26-mm half amplitude for 1 h each in X, Y, and Z directions					
	Shock resistance		150 m/s², 3 times each in ±X, ±Y, ±Z directions					
Reliability	MTBF		135,000 hrs min.					
	Life expectancy ✱		10 years min.					
Construction	Dimensions (W×H×D)		Refer to *Dimensions* on pages 21 and 24.					
	Weight		400 g max.					
	Cooling fan		No					
	Degree of protection		---					
Standards	Harmonic current emissions		Conforms to EN 61000-3-2, GB17625.1					
	EMI	Conducted Emissions	Conforms to EN 61204-3 Class B, EN 55011 Class B, GB9254					
		Radiated Emissions	Conforms to EN 61204-3 Class B, EN 55011 Class B, GB9254					
	EMS		Conforms to EN 61204-3 high severity levels					
	Safety Standards		Approved Standards UL : cURus UL 62368-1 (Recognition) OVC II Pol2 CSA: cURus C22.2 No62368-1 CCC: GB4943 Conformed Standards EN: EN 62368-1 OVC II Pol2 EAC (TR CU 004 / 2011, TR CU 020 / 2011) RCM (EN61000-6-4)					
	Marine Standards		No					
	SEMI		No					

✱ Refer to *Conditions* on page 12.

Item		Power rating / Output voltage (VDC)	150 W					
			5 V	12 V	15 V	24 V	36 V	48 V
Efficiency ✱		115 VAC input	81% typ.	84% typ.	85% typ.	86% typ.	86% typ.	87% typ.
		230 VAC input	82% typ.	85% typ.	86% typ.	87% typ.	87% typ.	88% typ.
Input	Voltage range ✱		Single phase 90 to 132 VAC , Single phase 180 to 264 VAC , 254 to 373 VDC Select with the switch. (The L terminal for the DC input is the positive side and safety standards do not apply.) (Derating is required according to the input voltage. Refer to *Derating Curves* on page 18.)					
	Frequency ✱		50 /60 Hz (47 to 450 Hz)					
	Current ✱	115 VAC input	2.8 A typ.					
		230 VAC input	1.6 A typ.					
	Power factor		---					
	Leakage current	115 VAC input	0.50 mA	0.50 mA	0.50 mA	0.50 mA	0.40 mA	0.50 mA
		230 VAC input	0.75 mA	0.75 mA	0.75 mA	0.70 mA	0.60 mA	0.70 mA
	Inrush current ✱ (for a cold start at 25°)	115 VAC input	32 A typ.					
		230 VAC input	32 A typ.					
Output	Rated Output Current		26 A	12.5 A	10 A	6.5 A	4.3 A	3.3 A
	Voltage adjustment range ✱		−10% to 10% (with V. ADJ)					
	Ripple & Noise voltage ✱	100 to 120 VAC/200 to 240 VAC input	50 mVp-p max.	90 mVp-p max.	110 mVp-p max.	100 mVp-p max.	200 mVp-p max.	120 mVp-p max.
	Input variation influence ✱		0.5% max.					
	Load variation influence ✱		1.0% max.					
	Temperature variation influence	100 to 120 VAC/200 to 240 VAC input	0.03%/°C max.					
	Startup time ✱	115 VAC input	770 ms typ.	730 ms typ.	740 ms typ.	770 ms typ.	730 ms typ.	760 ms typ.
		230 VAC input	750 ms typ.	720 ms typ.	730 ms typ.	760 ms typ.	720 ms typ.	750 ms typ.
	Hold time ✱	115 VAC input	29 ms typ.	24 ms typ.	27 ms typ.	23 ms typ.	23 ms typ.	21 ms typ.
		230 VAC input	35 ms typ.	30 ms typ.	31 ms typ.	28 ms typ.	29 ms typ.	27 ms typ.
Additional functions	Overload protection		Yes, automatic reset					
	Overvoltage protection ✱		Yes, 115% or higher of rated output voltage, power shut off (shut off the input voltage and turn on the input again)					
	Overheat protection		No					
	Series operation		Yes (For up to 2 Power Supplies, external diodes are required.)					
	Parallel operation		No (However, backup operation is possible, external diodes are required.)					
	Remote sensing		No					
	Remote control		No					
	Output indicator		Yes (LED: Green)					
Insulation	Withstand voltage		3 kVAC for 1 min. (between all input terminals and output terminals) current cutoff 20 mA					
			2 kVAC for 1 min. (between all input terminals and PE terminals) current cutoff 20 mA					
			1 kVAC for 1 min. (between all output terminals and PE terminals) current cutoff 20 mA					
	Insulation resistance		100 MΩ min. (between all output terminals and all input terminals/PE terminals) at 500 VDC					
Environment	Ambient operating temperature		−20 to 60°C (Derating is required according to the temperature. Refer to *Derating Curves* on page 17.) (with no condensation or icing)					
	Storage temperature		−40 to 85°C (with no condensation or icing)					
	Ambient operating humidity		20% to 90% (Storage humidity: 10% to 95%)					
	Vibration resistance		10 to 55 Hz, 0.375-mm half amplitude for 2 h each in X, Y, and Z directions 10 to 500 Hz, 0.26-mm half amplitude for 1 h each in X, Y, and Z directions					
	Shock resistance		150 m/s^2, 3 times each in ±X, ±Y, ±Z directions					
Reliability	MTBF		135,000 hrs min.					
	Life expectancy ✱		10 years min.					
Construction	Dimensions (W×H×D)		Refer to *Dimensions* on pages 21 and 24.					
	Weight		500 g max.					
	Cooling fan		No					
	Degree of protection		---					
Standards	Harmonic current emissions		Conforms to EN 61000-3-2, GB17625.1					
	EMI	Conducted Emissions	Conforms to EN 61204-3 Class B, EN 55011 Class B, GB9254					
		Radiated Emissions	Conforms to EN 61204-3 Class B, EN 55011 Class B, GB9254					
	EMS		Conforms to EN 61204-3 high severity levels					
	Safety Standards		Approved Standards UL : cURus UL 62368-1 (Recognition) OVC II Pol2 CSA: cURus C22.2 No62368-1 CCC: GB4943 Conformed Standards EN: EN 62368-1 OVC II Pol2 EAC (TR CU 004 / 2011, TR CU 020 / 2011) RCM (EN61000-6-4)					
	Marine Standards		No					
	SEMI		No					

✱ Refer to *Conditions* on page 12.

Item		Power rating / Output voltage (VDC)	200 W				
			5 V	12 V	24 V	36 V	48 V
Efficiency ✱		115 VAC input	81% typ.	85% typ.	88% typ.	89% typ.	88% typ.
		230 VAC input	81% typ.	87% typ.	88% typ.	90% typ.	90% typ.
Input	Voltage range ✱		Single phase 90 to 132 VAC , Single phase 180 to 264 VAC , 254 to 373 VDC Select with the switch. (The L terminal for the DC input is the positive side and safety standards do not apply.) (Derating is required according to the input voltage. Refer to *Derating Curves* on page 18.)				
	Frequency ✱		50 /60 Hz (47 to 450 Hz)				
	Current ✱	115 VAC input	4 A typ.				
		230 VAC input	2.3 A typ.				
	Power factor		---				
	Leakage current	115 VAC input	0.35 mA	0.25 mA	0.40 mA	0.20 mA	0.40 mA
		230 VAC input	0.60 mA	0.50 mA	0.75 mA	0.45 mA	0.80 mA
	Inrush current ✱ (for a cold start at 25°)	115 VAC input	16 A typ.				
		230 VAC input	32 A typ.				
Output	Rated Output Current		40 A	17 A	8.8 A	5.9 A	4.43 A
	Voltage adjustment range ✱		–10% to 10% (with V. ADJ)				
	Ripple & Noise voltage ✱	100 to 120 VAC/200 to 240 VAC input	60 mVp-p max.	60 mVp-p max.	110 mVp-p max.	130 mVp-p max.	120 mVp-p max.
	Input variation influence ✱		0.5% max.				
	Load variation influence ✱		1.0% max.				
	Temperature variation influence	100 to 120 VAC/200 to 240 VAC input	0.03%/°C max.				
	Startup time ✱	115 VAC input	620 ms typ.	630 ms typ.	580 ms typ.	630 ms typ.	620 ms typ.
		230 VAC input	600 ms typ.	610 ms typ.	550 ms typ.	600 ms typ.	600 ms typ.
	Hold time ✱	115 VAC input	32 ms typ.	30 ms typ.	38 ms typ.	30 ms typ.	31 ms typ.
		230 VAC input	37 ms typ.	35 ms typ.	45 ms typ.	37 ms typ.	37 ms typ.
Additional functions	Overload protection		Yes, automatic reset				
	Overvoltage protection ✱		Yes, 115% or higher of rated output voltage, power shut off (shut off the input voltage and turn on the input again)				
	Overheat protection		No				
	Series operation		Yes (For up to 2 Power Supplies, external diodes are required.)				
	Parallel operation		No (However, backup operation is possible, external diodes are required.)				
	Remote sensing		No				
	Remote control		No				
	Output indicator		Yes (LED: Green)				
Insulation	Withstand voltage		3 kVAC for 1 min. (between all input terminals and output terminals) current cutoff 20 mA				
			2 kVAC for 1 min. (between all input terminals and PE terminals) current cutoff 20 mA				
			1 kVAC for 1 min. (between all output terminals and PE terminals) current cutoff 20 mA				
	Insulation resistance		100 MΩ min. (between all output terminals and all input terminals/PE terminals) at 500 VDC				
Environment	Ambient operating temperature		–20 to 50°C (Derating is required according to the temperature. Refer to *Derating Curves* on page 17.) (with no condensation or icing)				
	Storage temperature		–40 to 85°C (with no condensation or icing)				
	Ambient operating humidity		20% to 90% (Storage humidity: 10% to 95%)				
	Vibration resistance		10 to 55 Hz, 0.375-mm half amplitude for 2 h each in X, Y, and Z directions 10 to 500 Hz, 0.26-mm half amplitude for 1 h each in X, Y, and Z directions				
	Shock resistance		150 m/s², 3 times each in ±X, ±Y, ±Z directions				
Reliability	MTBF		135,000 hrs min.				
	Life expectancy ✱		10 years min.				
Construction	Dimensions (W×H×D)		Refer to *Dimensions* on pages 22 and 25.				
	Weight		700 g max.				
	Cooling fan		No				
	Degree of protection		---				
Standards	Harmonic current emissions		---				
	EMI	Conducted Emissions	Conforms to EN 61204-3 Class A, EN 55011 Class A				
		Radiated Emissions	Conforms to EN 61204-3 Class A, EN 55011 Class A				
	EMS		Conforms to EN 61204-3 high severity levels				
	Safety Standards		Approved Standards UL : cURus UL 62368-1 (Recognition) OVC II Pol2 CSA: cURus C22.2 No62368-1 Conformed Standards EN: EN 62368-1 OVC II Pol2 EAC (TR CU 004 / 2011, TR CU 020 / 2011) RCM (EN61000-6-4)				
	Marine Standards		No				
	SEMI		No				

✱ Refer to *Conditions* on page 12.

Item		Power rating / Output voltage (VDC)	350 W				
			5 V	12 V	24 V	36 V	48 V
Efficiency ✱		115 VAC input	77% typ.	83% typ.	86% typ.	87% typ.	87% typ.
		230 VAC input	78% typ.	85% typ.	88% typ.	88% typ.	88% typ.
Input	Voltage range ✱		Single phase 90 to 132 VAC , Single phase 180 to 264 VAC , 254 to 373 VDC Select with the switch. (The L terminal for the DC input is the positive side and safety standards do not apply.) (Derating is required according to the input voltage. Refer to *Derating Curves* on page 18.)				
	Frequency ✱		50 /60 Hz (47 to 450 Hz)				
	Current ✱	115 VAC input	6.4 A typ.				
		230 VAC input	3.5 A typ.				
	Power factor		---				
	Leakage current	115 VAC input	0.40 mA	0.40 mA	0.40 mA	0.40 mA	0.40 mA
		230 VAC input	0.75 mA	0.80 mA	0.75 mA	0.80 mA	0.80 mA
	Inrush current ✱ (for a cold start at 25°)	115 VAC input	16 A typ.				
		230 VAC input	32 A typ.				
Output	Rated Output Current		60 A	29 A	14.6 A	9.7 A	7.32 A
	Voltage adjustment range ✱		–10% to 10% (with V. ADJ)				
	Ripple & Noise voltage ✱	100 to 120 VAC/200 to 240 VAC input	110 mVp-p max.	130 mVp-p max.	120 mVp-p max.	180 mVp-p max.	180 mVp-p max.
	Input variation influence ✱		0.5% max.				
	Load variation influence ✱		2.0% max.	1.0% max.			
	Temperature variation influence	100 to 120 VAC/200 to 240 VAC input	0.03%/°C max.				
	Startup time ✱	115 VAC input	610 ms typ.	620 ms typ.	580 ms typ.	610 ms typ.	610 ms typ.
		230 VAC input	570 ms typ.	590 ms typ.	560 ms typ.	590 ms typ.	590 ms typ.
	Hold time ✱	115 VAC input	25 ms typ.	18 ms typ.	17 ms typ.	19 ms typ.	19 ms typ.
		230 VAC input	31 ms typ.	25 ms typ.	23 ms typ.	25 ms typ.	24 ms typ.
Additional functions	Overload protection		Yes, automatic reset				
	Overvoltage protection ✱		Yes, 115% or higher of rated output voltage, power shut off (shut off the input voltage and turn on the input again)				
	Overheat protection		Yes, power shut off (shut off the input voltage and turn on the input again) (Overheat protection when the cooling fan is in an abnormal condition)				
	Series operation		Yes (For up to 2 Power Supplies, external diodes are required.)				
	Parallel operation		No (However, backup operation is possible, external diodes are required.)				
	Remote sensing		No				
	Remote control		No				
	Output indicator		Yes (LED: Green)				
Insulation	Withstand voltage		3 kVAC for 1 min. (between all input terminals and output terminals) current cutoff 20 mA				
			2 kVAC for 1 min. (between all input terminals and PE terminals) current cutoff 20 mA				
			1 kVAC for 1 min. (between all output terminals and PE terminals) current cutoff 20 mA				
	Insulation resistance		100 MΩ min. (between all output terminals and all input terminals/PE terminals) at 500 VDC				
Environment	Ambient operating temperature		–20 to 60°C (Derating is required according to the temperature. Refer to *Derating Curves* on page 17.) (with no condensation or icing)				
	Storage temperature		–40 to 85°C (with no condensation or icing)				
	Ambient operating humidity		20% to 90% (Storage humidity: 10% to 95%)				
	Vibration resistance		10 to 55 Hz, 0.375-mm half amplitude for 2 h each in X, Y, and Z directions 10 to 500 Hz, 0.26-mm half amplitude for 1 h each in X, Y, and Z directions				
	Shock resistance		150 m/s², 3 times each in ±X, ±Y, ±Z directions				
Reliability	MTBF		135,000 hrs min.				
	Life expectancy ✱		10 years min.				
Construction	Dimensions (W×H×D)		Refer to *Dimensions* on pages 22 and 25.				
	Weight		800 g max.				
	Cooling fan		Yes (ON/OFF control according to internal temperature)				
	Degree of protection		---				
Standards	Harmonic current emissions		---				
	EMI	Conducted Emissions	Conforms to EN 61204-3 Class A, EN 55011 Class A				
		Radiated Emissions	Conforms to EN 61204-3 Class A, EN 55011 Class A				
	EMS		Conforms to EN 61204-3 high severity levels				
	Safety Standards		Approved Standards UL : cURus UL 62368-1 (Recognition) OVC II Pol2 CSA: cURus C22.2 No62368-1 Conformed Standards EN: EN 62368-1 OVC II Pol2 EAC (TR CU 004 / 2011, TR CU 020 / 2011) RCM (EN61000-6-4)				
	Marine Standards		No				
	SEMI		No				

✱ Refer to *Conditions* on page 12.

Conditions

Efficiency		The value is given for the rated output voltage and rated output current.
Input	**Voltage range**	Although some inverters give 50/60 Hz as the output frequency, do not use an inverter output as the power source for the Power Supply. Doing so may result in smoking or burning due to internal temperature increases in the Power Supply. If you connect a UPS to the input, do not connect one with a square wave output.
	Frequency	
	Current	The value is given for the rated output voltage and rated output current.
	Inrush current (for a cold start at 25°C)	The value is given for a cold start at 25°C. Refer to following for details.
Output	**Voltage adjustment range**	If the output voltage adjuster (V. ADJ) is turned, the voltage will increase by 10% or more over the voltage adjustment range. When adjusting the output voltage, confirm the actual output voltage from the Power Supply and be sure that load is not damaged.
	Ripple & Noise voltage	The value is given for the rated output voltage and rated output current. The value is for an ambient operating temperature of 25°C.
	Input variation influence	This is the maximum variation in the output voltage when the input voltage is gradually changed within the allowable input voltage range at the rated output voltage and rated output current.
	Load variation influence	This is the value when the output current is changed from 0 A to the rated output current while the input voltage is within the allowable input voltage.
	Startup time	The value is given for the rated output voltage and rated output current. The value is given for a cold start at 25°C. Refer to following for details.
	Hold time	The value is given for the rated output voltage and rated output current. Refer to following for details.
Additional functions	**Overvoltage protection**	Refer to *Overvoltage Protection* on page 19 for information on resetting the input power.
Reliability	**Life expectancy**	Refer to *Recommended Replacement Periods and Periodic Replacement for Preventive Maintenance* on page 39 for details.

Inrush Current, Startup Time, and Output Hold Time

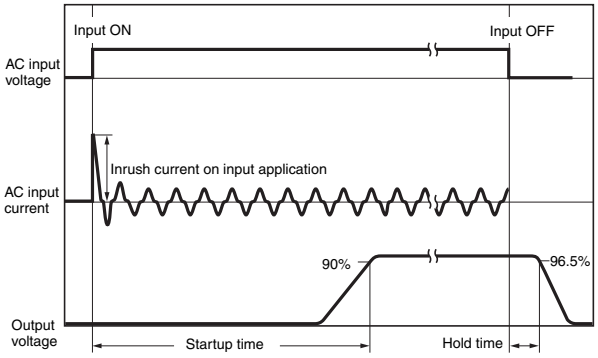

Note: Twice the normal input current will flow for a redundant system. Sufficiently check the fusing characteristics of fuses and the operating characteristics of breakers and select fuses and breakers so that external fuses will not burn out or breakers will not operate due to inrush current.

Ripple Noise Voltage

The specified standard for the ripple voltage noise was measured with the following measurement circuit.

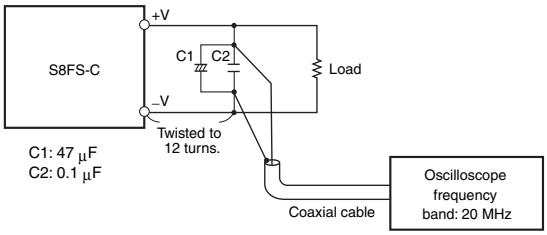

Connections

Block Diagrams

S8FS-C015□□□ (15 W)

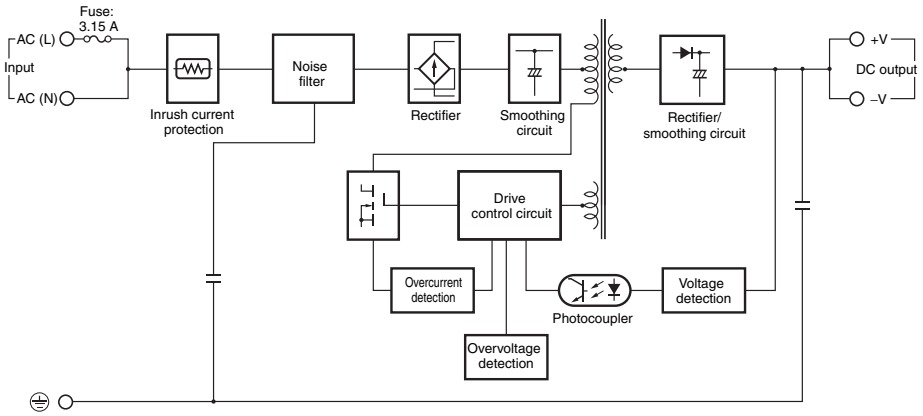

S8FS-C025□□□ (25 W)
S8FS-C035□□□ (35 W)
S8FS-C050□□□ (50 W)
S8FS-C075□□□ (75 W)

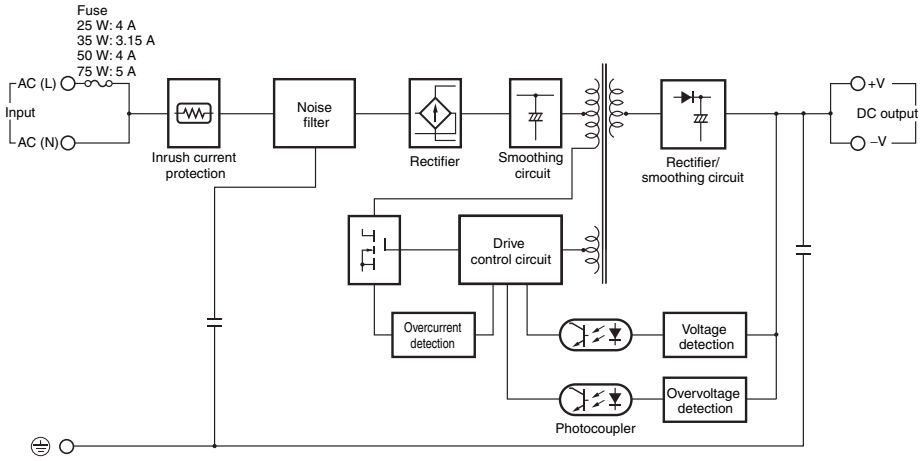

S8FS-C10012□ (100 W)
S8FS-C10015□ (100 W)
S8FS-C10024□ (100 W)
S8FS-C10036□ (100 W)
S8FS-C10048□ (100 W)

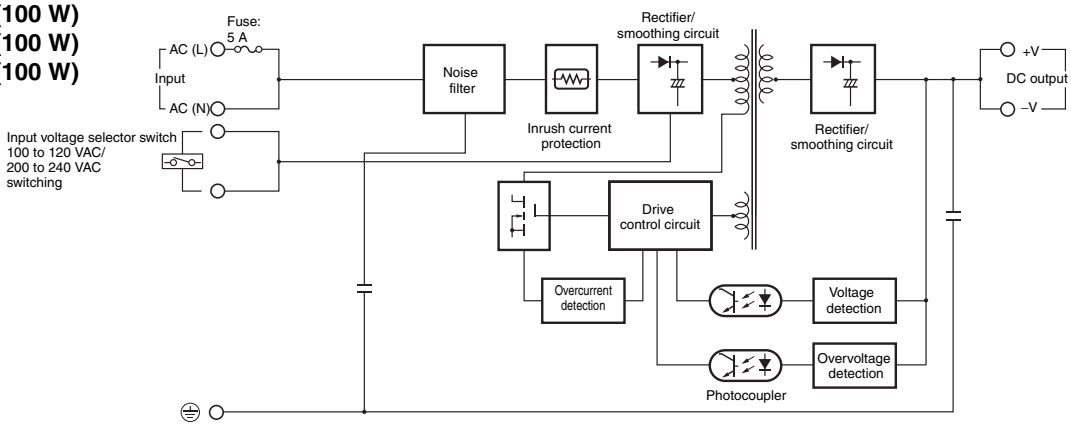

S8FS-C10005□ (100 W)
S8FS-C150□□□ (150 W)

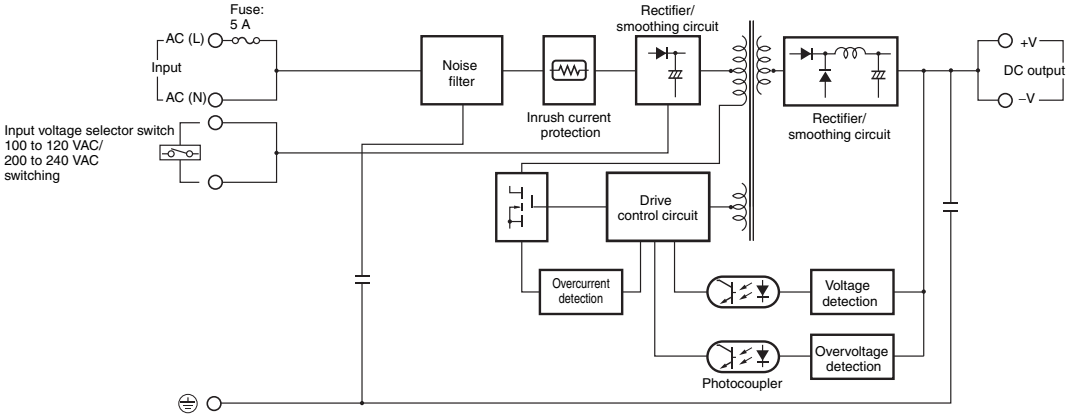

S8FS-C200□□□ (200 W)

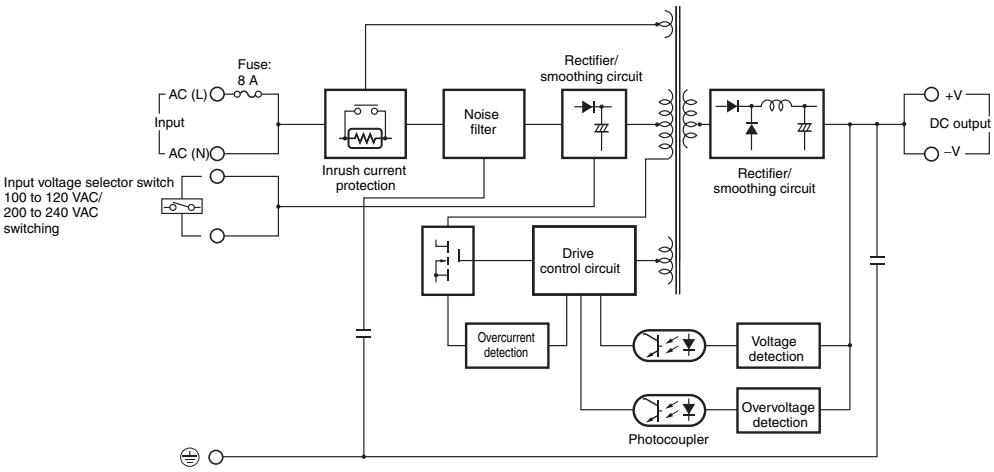

S8FS-C35024□ (350 W)

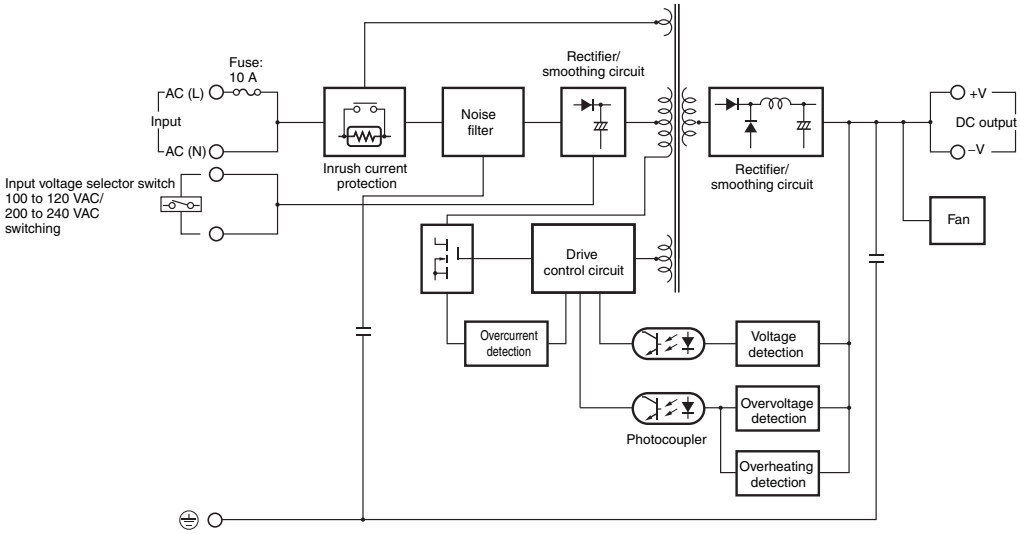

S8FS-C35005□ (350 W)
S8FS-C35012□ (350 W)
S8FS-C35036□ (350 W)
S8FS-C35048□ (350 W)

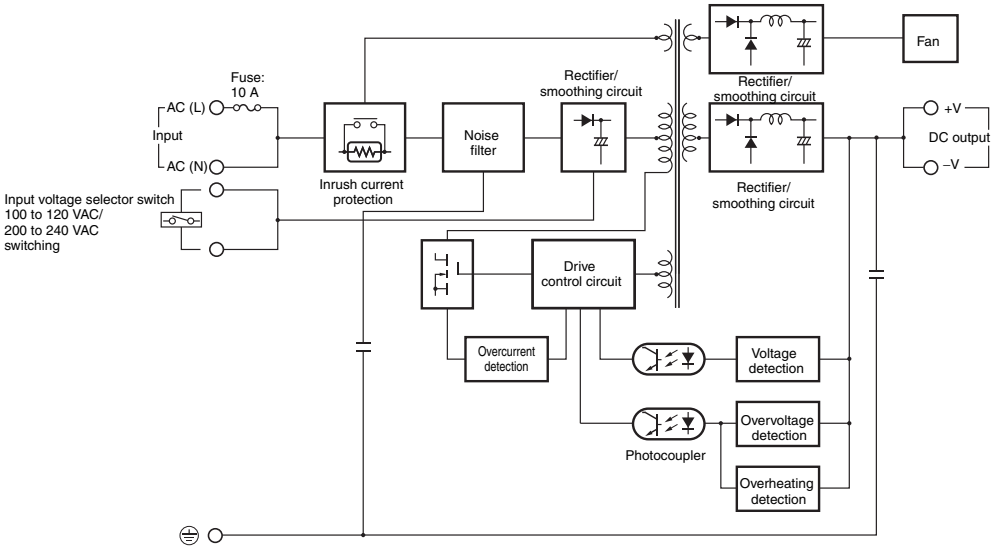

Construction and Nomenclature

Nomenclature

15-W Models

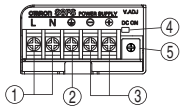

S8FS-C015□□□

25-W, 35-W, 50-W, and 75-W Models

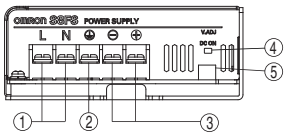

S8FS-C025□□ S8FS-C050□□
S8FS-C035□□ S8FS-C075□□

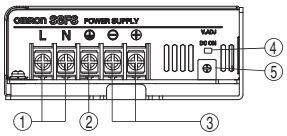

S8FS-C025□□□ S8FS-C050□□□
S8FS-C035□□□ S8FS-C075□□□

100-W and 150-W Models

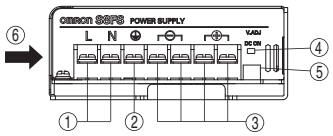

S8FS-C100□□
S8FS-C150□□

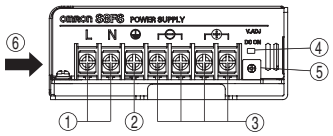

S8FS-C100□□□
S8FS-C150□□□

200-W and 350-W Models

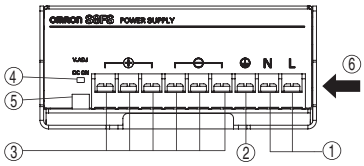

S8FS-C200□□
S8FS-C350□□

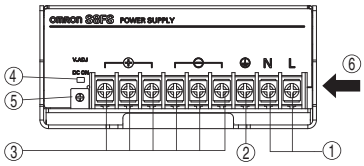

S8FS-C200□□□
S8FS-C350□□□

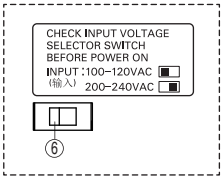

No.	Name	Function
1	Input terminals (L), (N)	Connect the input lines to these terminals. ✻1
2	Protective Earth Terminal (PE)	Connect the ground line to this terminal. ✻2
3	DC output terminals (–V), (+V)	Connect the load lines to these terminals.
4	Output indicator (DC ON: Green)	Lit while the DC output is ON.
5	Output voltage adjuster (V. ADJ)	Use to adjust the output voltage.
6	Input voltage selector switch	Used to switch the input voltage. ✻3, ✻4

✻1. The fuse is located on the (L) side. It is not user replaceable. For a DC power input, connect the positive voltage to the L terminal.
✻2. This is the protective earth terminal specified in the safety standards. Always ground this terminal.
✻3. The 100-W, 150-W, 200-W, and 350-W models only.
✻4. Refer to *Input Voltage Selector Switch* in *Safety Precautions* on page 36.

Engineering Data

Derating Curves

Derating for Ambient Temperatures

<table>
<tr><th>Power rating
Output voltage</th><th>15 W</th><th>25 W</th><th>35 W</th><th>50 W</th><th>75 W</th><th>100 W</th><th>150 W</th><th>200 W</th><th>350 W</th></tr>
<tr><td>5 V</td><td rowspan="4">(1)</td><td>(2)</td><td rowspan="4">(1)</td><td rowspan="4">(1)</td><td>(3)</td><td>(4)</td><td>(5)</td><td>(7)</td><td rowspan="2">(1)</td></tr>
<tr><td>12 V</td><td rowspan="3">(1)</td><td rowspan="3">(1)</td><td rowspan="3">(2)</td><td rowspan="3">(1)</td><td>(6)</td></tr>
<tr><td>15 V</td><td>---</td><td>---</td></tr>
<tr><td>24 V</td><td rowspan="3">(6)</td><td rowspan="3">(1)</td></tr>
<tr><td>36 V</td><td>---</td><td>---</td><td>---</td><td>---</td><td>---</td></tr>
<tr><td>48 V</td><td>---</td><td>---</td><td>---</td><td>(1)</td><td>(1)</td></tr>
</table>

(1)

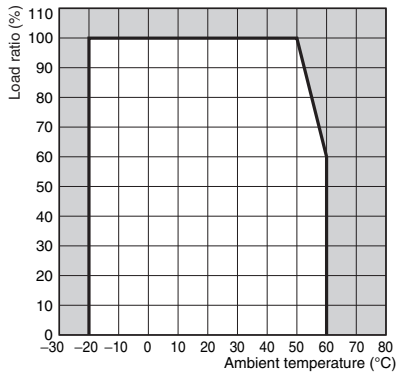

(2)

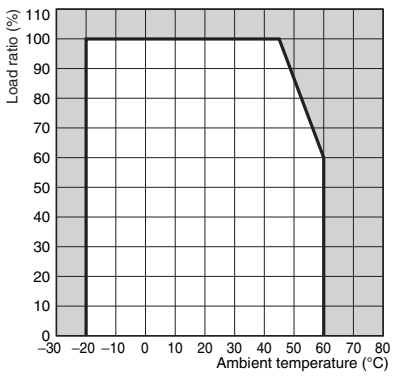

(3)

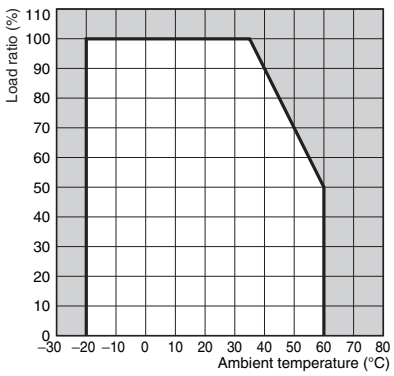

(4)

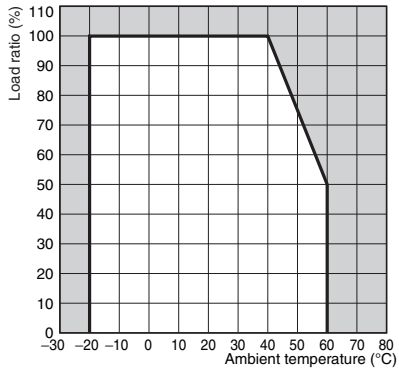

(5)

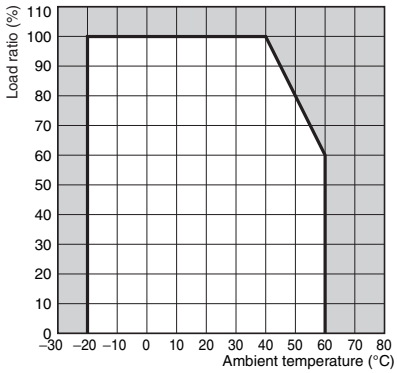

(6)

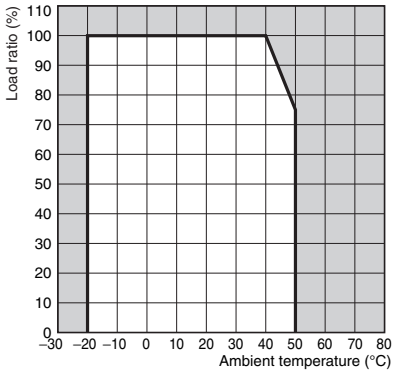

(7)

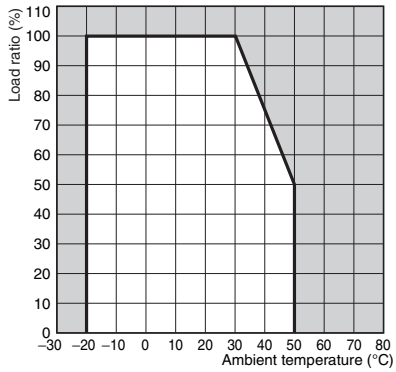

Note: The internal parts may occasionally deteriorate or be damaged. Use the standard mounting method only. Do not use the Power Supply in the area outside the derating curve.

Derating for Input Voltages

<table>
<tr><th>Power rating
Output voltage</th><th>15 W</th><th>25 W</th><th>35 W</th><th>50 W</th><th>75 W</th><th>100 W</th><th>150 W</th><th>200 W</th><th>350 W</th></tr>
<tr><td>5 V</td><td rowspan="4">(8)</td><td rowspan="4">(8)</td><td rowspan="4">(8)</td><td rowspan="4">(8)</td><td rowspan="4">(8)</td><td rowspan="6">(9) (10)</td><td rowspan="6">(11) (12)</td><td rowspan="2">(11) (14)</td><td rowspan="2">(11) (15)</td></tr>
<tr><td>12 V</td></tr>
<tr><td>15 V</td><td rowspan="2">---</td><td rowspan="2">---</td></tr>
<tr><td>24 V</td></tr>
<tr><td>36 V</td><td>---</td><td>---</td><td>---</td><td>---</td><td>---</td><td rowspan="2">(13) (15)</td><td rowspan="2">(11) (15)</td></tr>
<tr><td>48 V</td><td>---</td><td>---</td><td>---</td><td>(8)</td><td>(8)</td></tr>
</table>

(8)

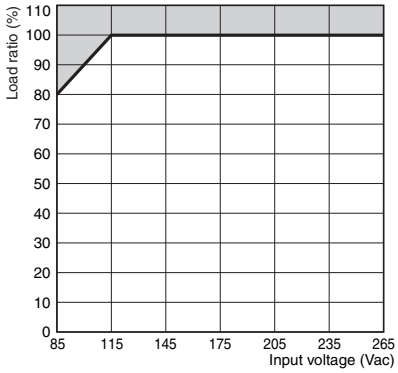

(9)

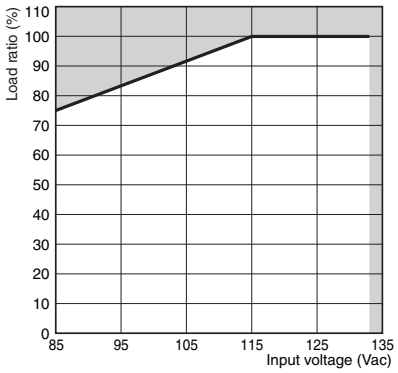

(10)

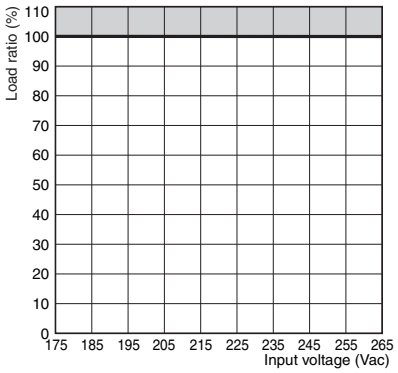

(11)

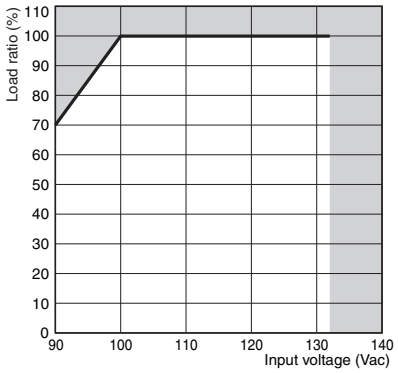

(12)

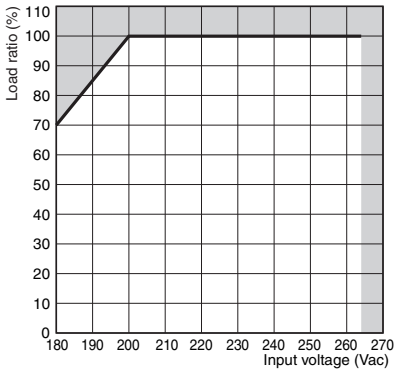

(13)

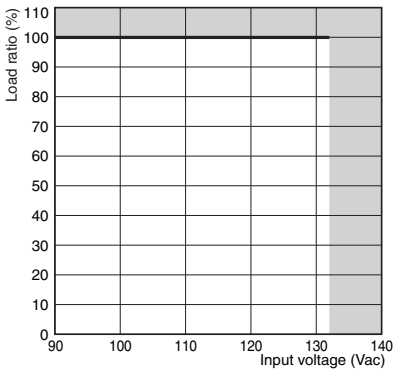

(14)

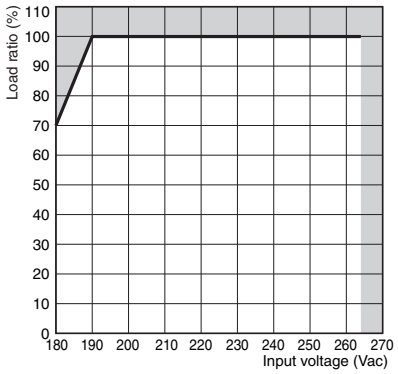

(15)

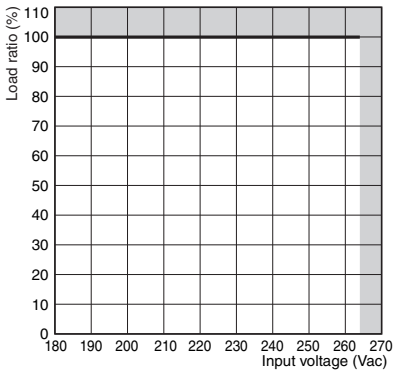

Note: The internal parts may occasionally deteriorate or be damaged. Use the standard mounting method only. Do not use the Power Supply in the area outside the derating curve.

Overload Protection

The load and the Power Supply are automatically protected from short-circuit currents and overcurrent damage by this function. Overload protection is activated if the output current rises above 105% of the rated current.
When the output current returns within the rated range, the overload protection is automatically cleared.

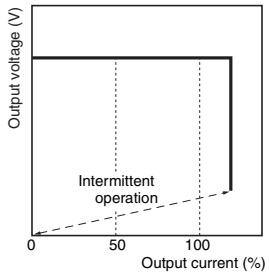

The values shown in the above diagrams are for reference only.

Note: 1. If the Power Supply has been short-circuited or supplied with an overcurrent longer than 10 seconds, the internal parts of the Power Supply may occasionally deteriorate or be damaged.

2. Internal parts may possibly deteriorate or be damaged if the Power Supply is used for applications with frequent inrush current or overloading at the load end. Do not use the Power Supply for such applications.

Overvoltage Protection

Consider the possibility of an overvoltage and design the system so that the load will not be subjected to an excessive voltage even if the feedback circuit in the Power Supply fails. When an excessive voltage that is 115% of the rated voltage or more is output, the output voltage is shut OFF, preventing damage to the load due to overvoltage. Reset the input power by turning it OFF for at least three minutes and then turning it back ON again.

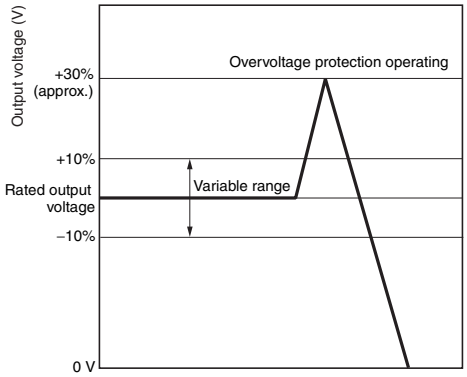

The values shown in the above diagrams are for reference only.

Note: Do not turn ON the power again until the cause of the overvoltage has been removed.

Overheat Protection (S8FS-C350□□□ Only)

If the internal temperature rises excessively as a result of fan failure or any other reason, the overheat protection circuit will operate to protect internal elements. Reset the input power by turning it OFF for at least three minutes and then turning it back ON again.

Dimensions

(Unit: mm)

Power Supplies

Models with Terminal Block Facing Upward

S8FS-C025□□ (25 W)

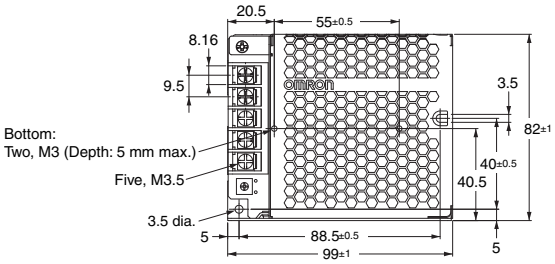

Side: Two, M3 (Depth: 3 mm max.)

Panel mounting hole dimensions

	Using the mounting holes in the Power Supply	Using the screw holes in the Power Supply
Bottom mounting	Two, M3; 40±0.5; 88.5±0.5	Two, 3.5 dia.; 55±0.5
Side mounting	Two, M3; 87±0.5	Two, 3.5 dia.; 74±0.5

S8FS-C035□□ (35 W)

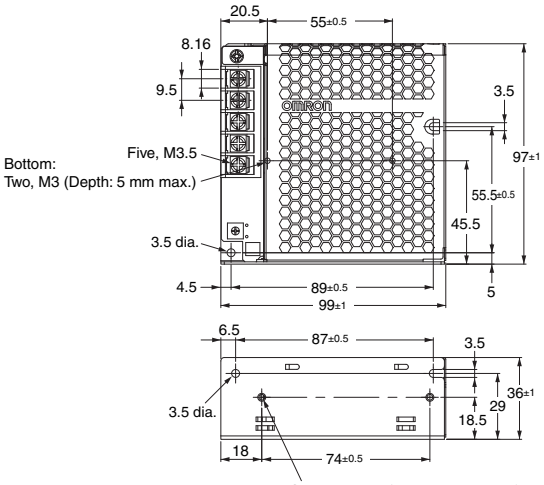

Side: Two, M3 (Depth: 3 mm max.)

Panel mounting hole dimensions

	Using the mounting holes in the Power Supply	Using the screw holes in the Power Supply
Bottom mounting	Two, M3; 55.5±0.5; 89±0.5	Two, 3.5 dia.; 55±0.5
Side mounting	Two, M3; 87±0.5	Two, 3.5 dia.; 74±0.5

S8FS-C050□□ (50 W)

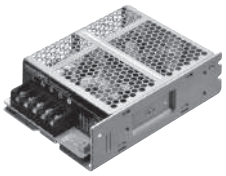

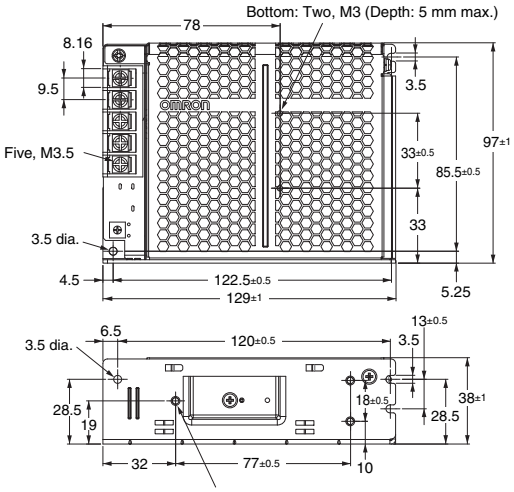

Side: Three, M3 (Depth: 6 mm max.)

Panel mounting hole dimensions

	Using the mounting holes in the Power Supply	Using the screw holes in the Power Supply
Bottom mounting	Two, M3; 85.5±0.5; 122.5±0.5	Two, 3.5 dia.; 33±0.5
Side mounting	Three, M3; 120±0.5; 13±0.5	Three, 3.5 dia.; 18±0.5; 9±0.5; 77±0.5

S8FS-C075□□ (75 W)
S8FS-C100□□ (100 W)

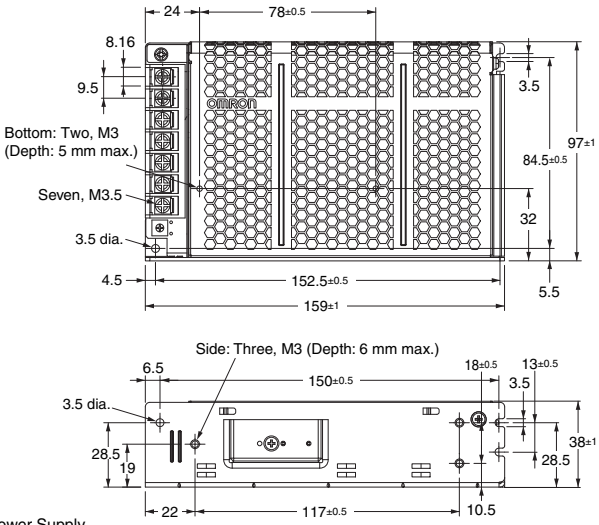

Panel mounting hole dimensions

	Using the mounting holes in the Power Supply	Using the screw holes in the Power Supply
Bottom mounting	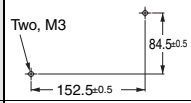	
Side mounting	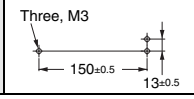	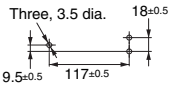

Note: The figure shows a 100-W Power Supply.
A 75-W Power Supply has 5 terminals.

S8FS-C150□□ (150 W)

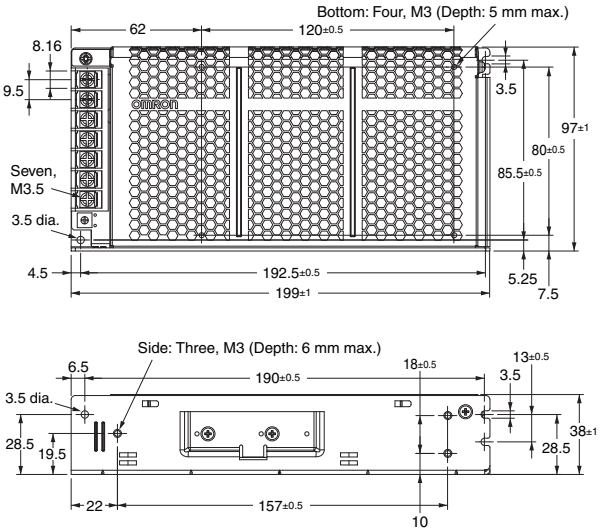

Panel mounting hole dimensions

	Using the mounting holes in the Power Supply	Using the screw holes in the Power Supply
Bottom mounting	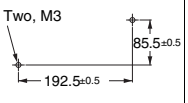	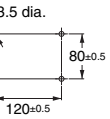
Side mounting	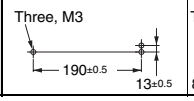	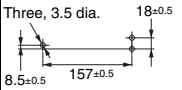

S8FS-C200□□ (200 W)

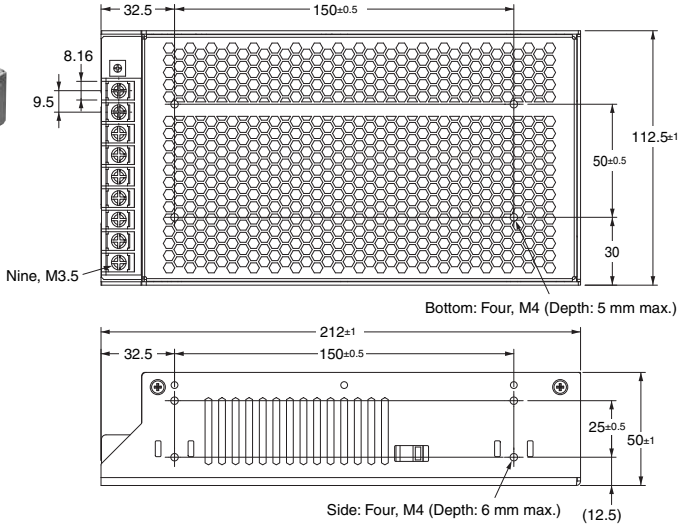

Panel mounting hole dimensions

	Using the screw holes in the Power Supply
Bottom mounting	Four, 4.5 dia. 50±0.5 150±0.5
Side mounting	Four, 4.5 dia. 25±0.5 150±0.5

S8FS-C350□□ (350 W)

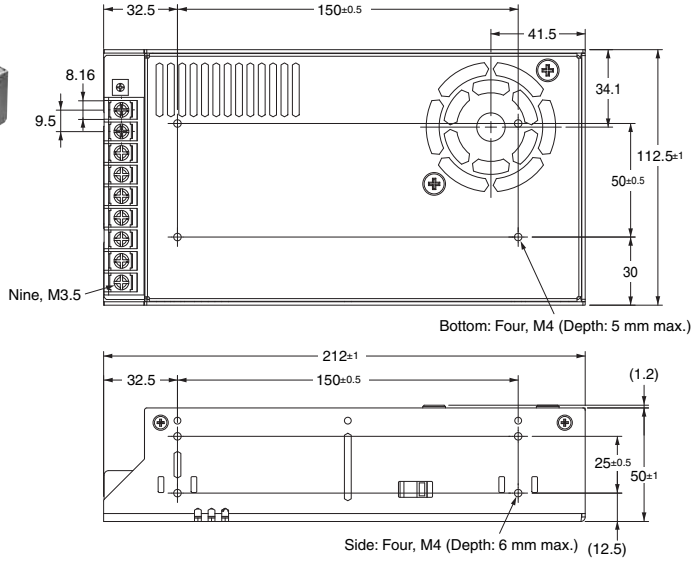

Panel mounting hole dimensions

	Using the screw holes in the Power Supply
Bottom mounting	Four, 4.5 dia. 50±0.5 150±0.5
Side mounting	Four, 4.5 dia. 25±0.5 150±0.5

Models with Terminal Block Facing Forward

S8FS-C015□□J (15 W)

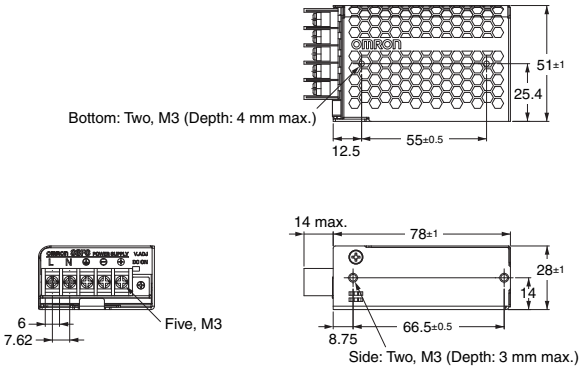

Panel mounting hole dimensions

	Using the screw holes in the Power Supply
Bottom mounting	Two, 3.5 dia. 55±0.5
Side mounting	Two, 3.5 dia. 66.5±0.5

S8FS-C025□□J (25 W)

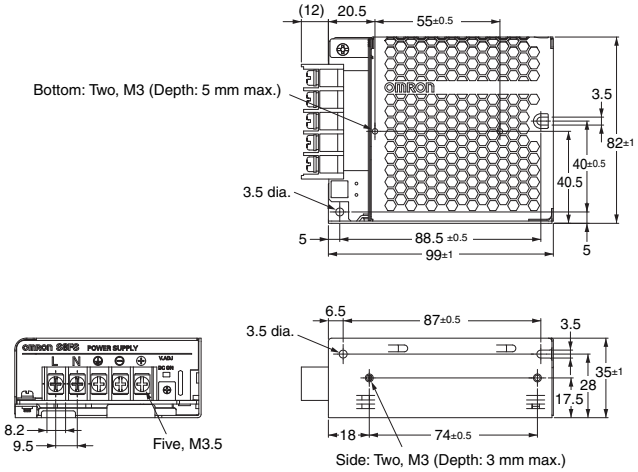

Panel mounting hole dimensions

	Using the mounting holes in the Power Supply	Using the screw holes in the Power Supply
Bottom mounting	Two, M3 40±0.5 88.5±0.5	Two, 3.5 dia. 55±0.5
Side mounting	Two, M3 87±0.5	Two, 3.5 dia. 74±0.5

S8FS-C035□□J (35 W)

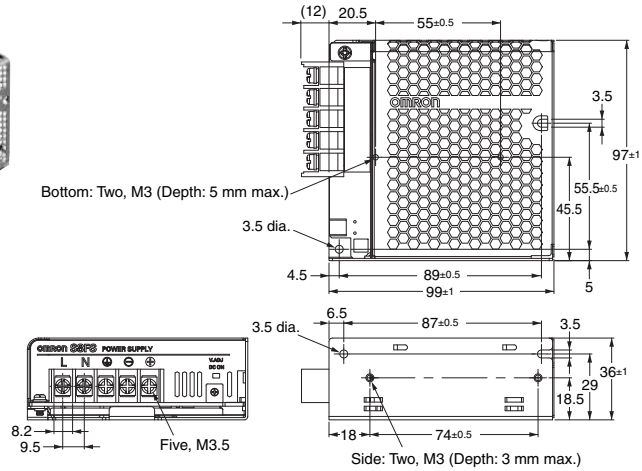

Panel mounting hole dimensions

	Using the mounting holes in the Power Supply	Using the screw holes in the Power Supply
Bottom mounting	Two, M3 55.5±0.5 89±0.5	Two, 3.5 dia. 55±0.5
Side mounting	Two, M3 87±0.5	Two, 3.5 dia. 74±0.5

S8FS-C050□□J (50 W)

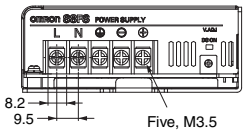

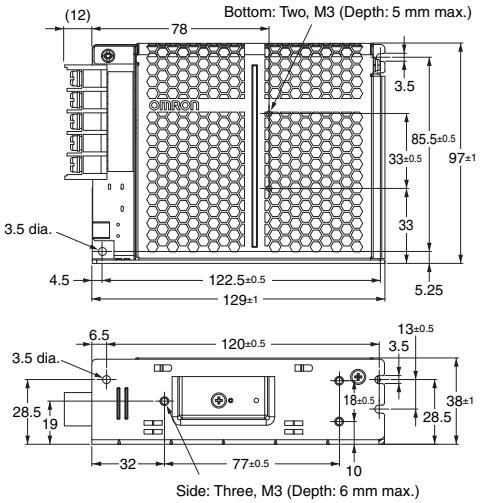

Panel mounting hole dimensions

	Using the mounting holes in the Power Supply	Using the screw holes in the Power Supply
Bottom mounting	Two, M3; 85.5±0.5; 122.5±0.5	Two, 3.5 dia.; 33±0.5
Side mounting	Three, M3; 120±0.5; 13±0.5	Three, 3.5 dia.; 18±0.5; 9±0.5; 77±0.5

S8FS-C075□□J (75 W)
S8FS-C100□□J (100 W)

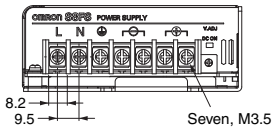

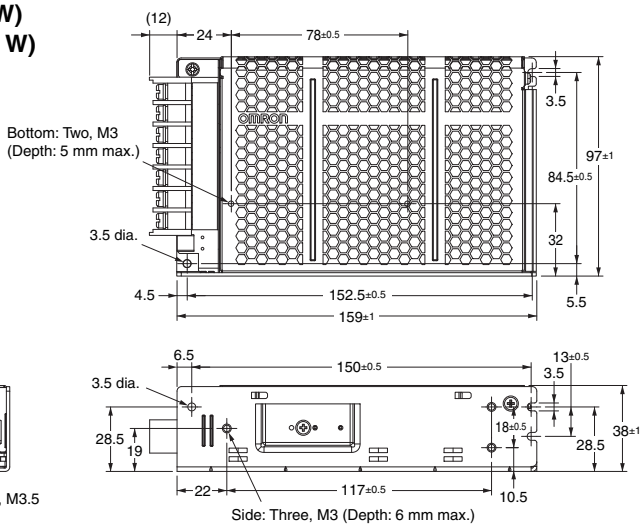

Panel mounting hole dimensions

	Using the mounting holes in the Power Supply	Using the screw holes in the Power Supply
Bottom mounting	Two, M3; 84.5±0.5; 152.5±0.5	Two, 3.5 dia.; 78±0.5
Side mounting	Three, M3; 150±0.5; 13±0.5	Three, 3.5 dia.; 18±0.5; 9.5±0.5; 117±0.5

Note: The figure shows a 100-W Power Supply.
A 75-W Power Supply has 5 terminals.

S8FS-C150□□J (150 W)

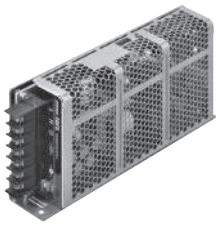

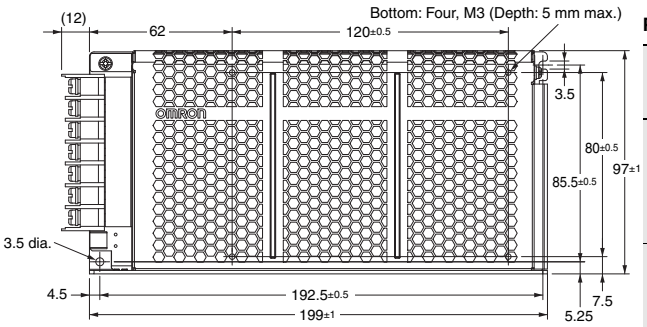

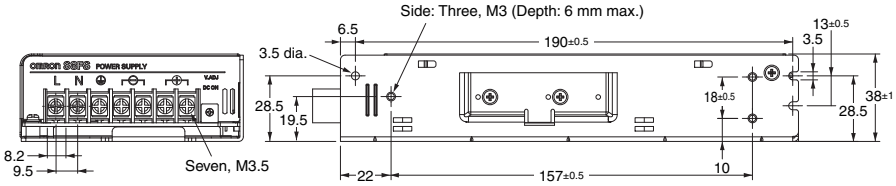

Panel mounting hole dimensions

	Using the mounting holes in the Power Supply	Using the screw holes in the Power Supply
Bottom mounting	Two, M3; 85.5±0.5; 192.5±0.5	Four, 3.5 dia.; 80±0.5; 120±0.5
Side mounting	Three, M3; 190±0.5; 13±0.5	Three, 3.5 dia.; 18±0.5; 8.5±0.5; 157±0.5

S8FS-C200□□J (200 W)

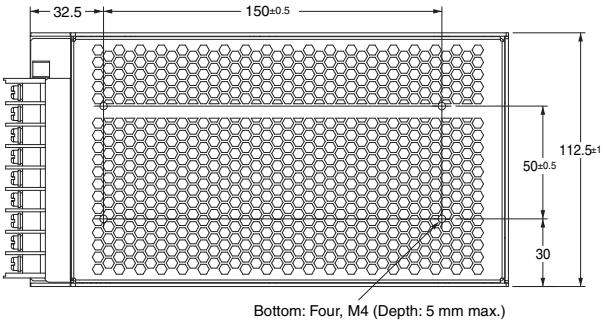

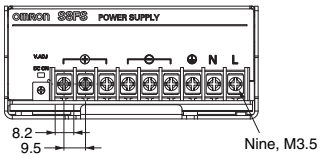

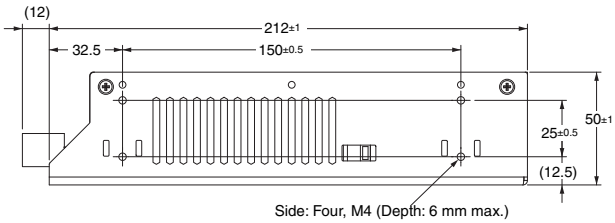

Panel mounting hole dimensions

	Using the screw holes in the Power Supply
Bottom mounting	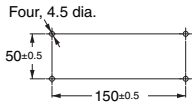
Side mounting	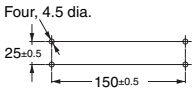

S8FS-C350□□J (350 W)

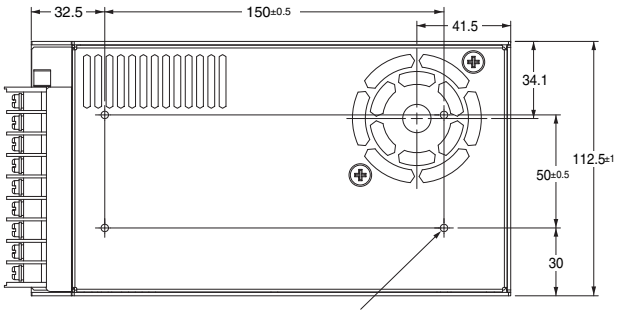

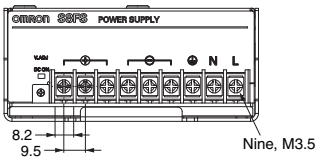

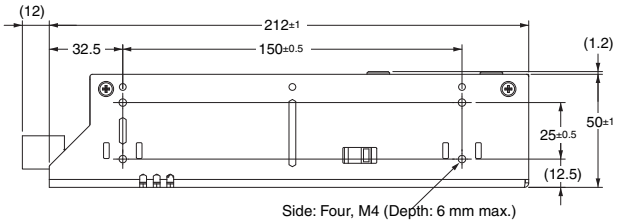

Panel mounting hole dimensions

	Using the screw holes in the Power Supply
Bottom mounting	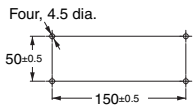
Side mounting	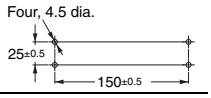

Models with DIN rail

S8FS-C015□□D (15 W)

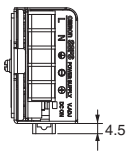

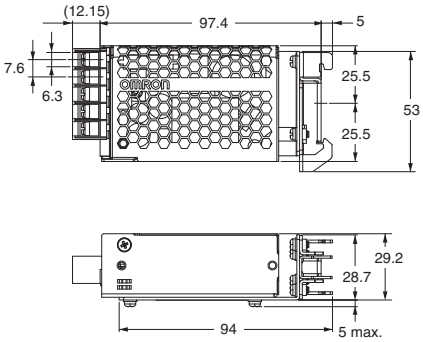

S8FS-C025□□D (25 W)

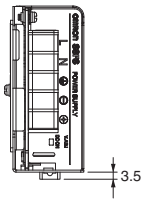

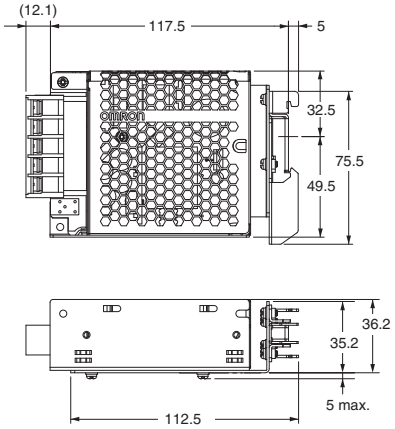

S8FS-C035□□D (35 W)

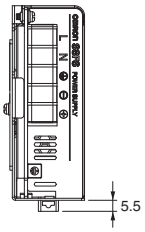

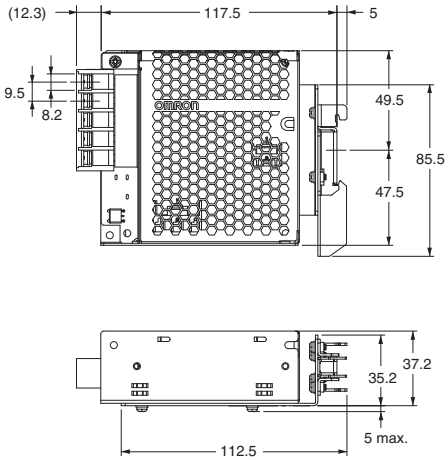

S8FS-C050□□D (50 W)

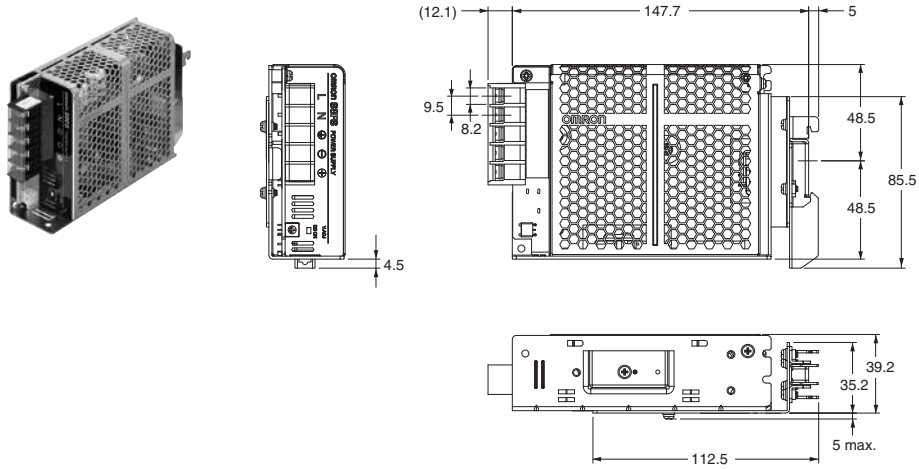

S8FS-C075□□D (75 W)
S8FS-C100□□D (100 W)

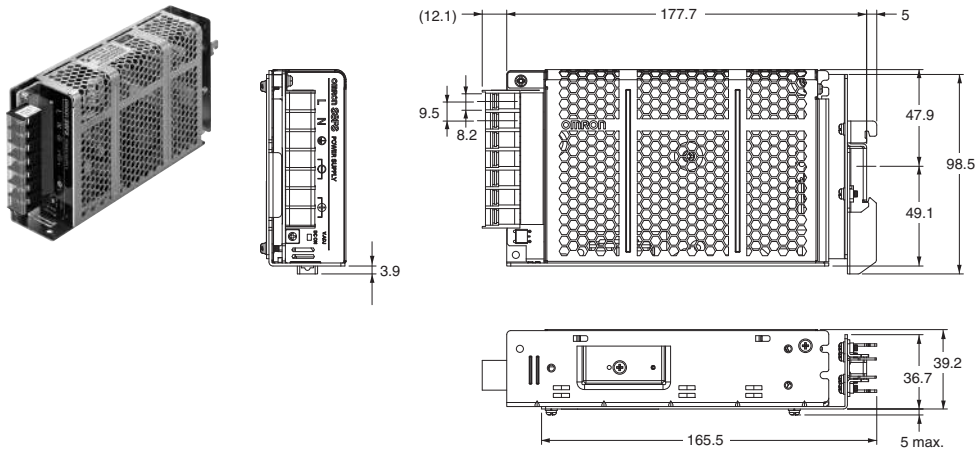

Note: The figure shows a 100-W Power Supply.
A 75-W Power Supply has 5 terminals.

S8FS-C150□□D (150 W)

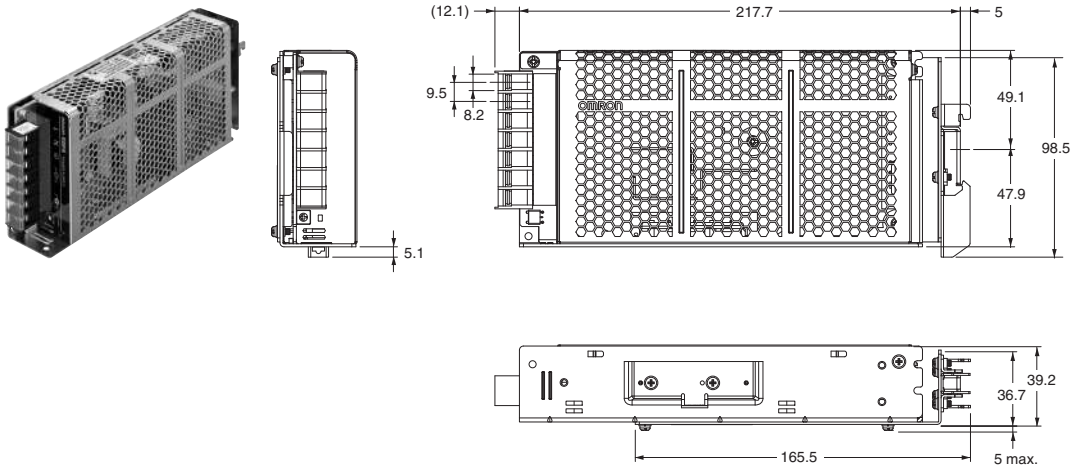

S8FS-C200□□D (200 W)

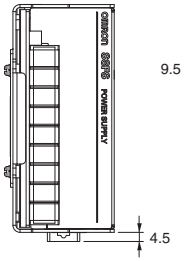

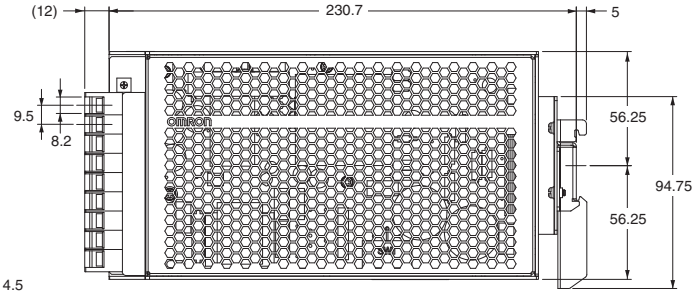

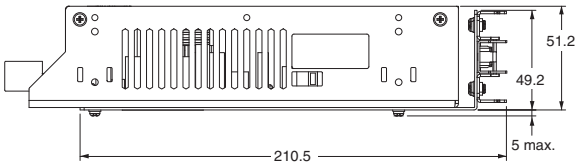

S8FS-C350□□D (350 W)

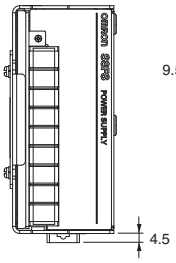

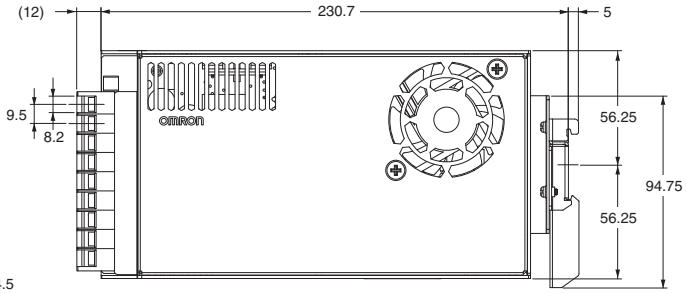

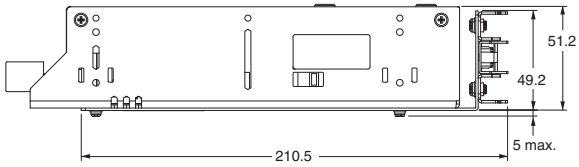

Mounting Brackets (Order Separately)

Power rating	Mounting direction	Model
15 W	DIN Rail	S82Y-FSC015DIN
25 W		S82Y-FSC025DIN
35 W		S82Y-FSC050DIN
50 W		
75 W		S82Y-FSC150DIN
100 W		
150 W		
200 W		S82Y-FSC350DIN
350 W		
15 W	Bottom-mounting to DIN Rail	S82Y-FSC015DIN-S
25 W		S82Y-FSC025DIN-S
35 W		S82Y-FSC035DIN-S
50 W		S82Y-FSC050DIN-S
75 W		S82Y-FSC100DIN-S
100 W		
150 W		S82Y-FSC150DIN-S
200 W	Bottom-mounting with L-brackets	S82Y-FSC350B (4 brackets)
350 W		

S82Y-FSC015DIN

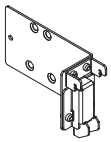

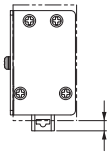

4.5 (Sliding: 7.2 max.)

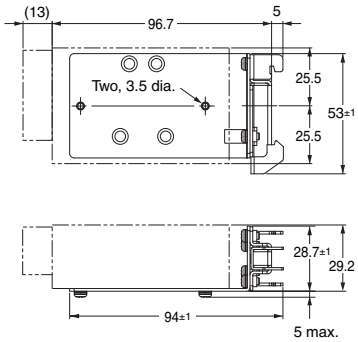

Mounting Method

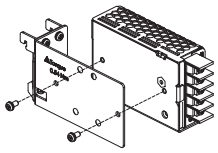

Accessories (2 locations)
Be sure to use the accessory screws.
Mounting screw tightening torque: 0.48 to 0.59 N·m for M3 screws

S82Y-FSC025DIN

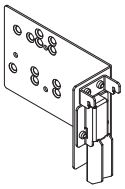

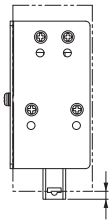

3.5 (Sliding: 6.2 max.)

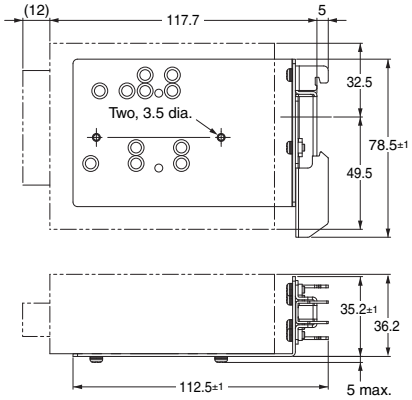

Mounting Method

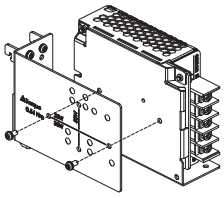

Accessories (2 locations)
Be sure to use the accessory screws.
Mounting screw tightening torque: 0.48 to 0.59 N·m for M3 screws

S82Y-FSC050DIN

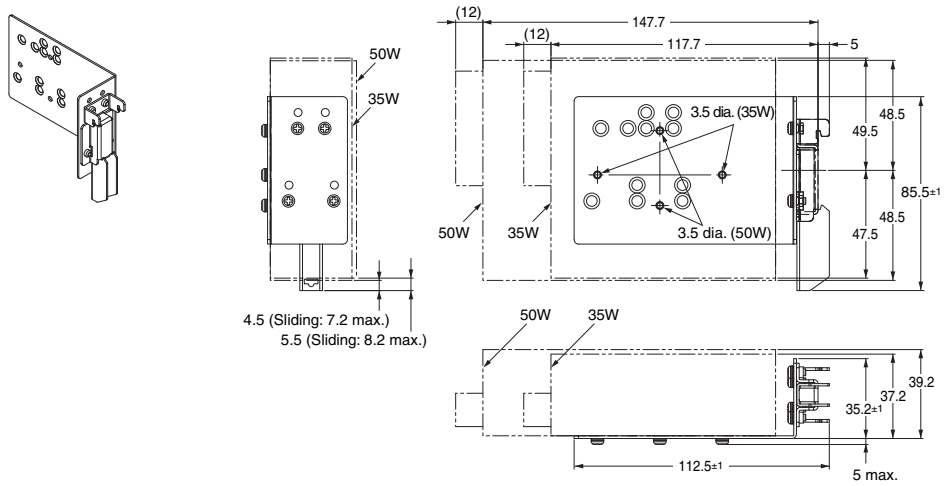

Mounting Method

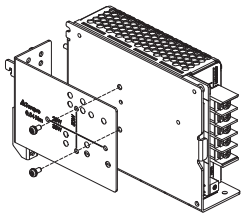

Accessories (2 locations)
Be sure to use the accessory screws.
Mounting screw tightening torque:
0.48 to 0.59 N·m for M3 screws

S82Y-FSC150DIN

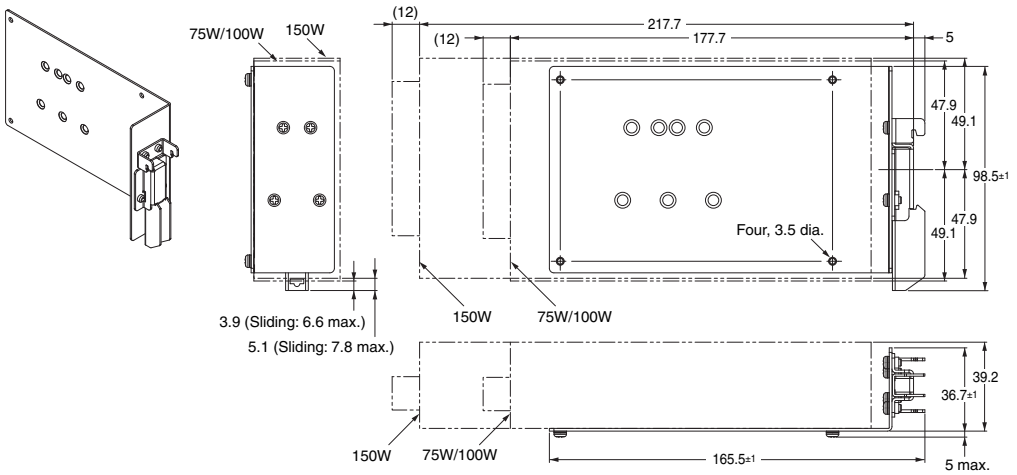

Mounting Method

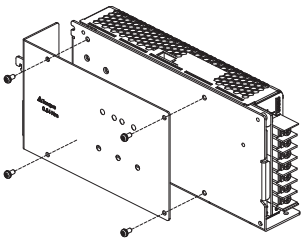

Accessories (4 locations)
Be sure to use the accessory screws.
Mounting screw tightening torque:
0.48 to 0.59 N·m for M3 screws

S82Y-FSC350DIN

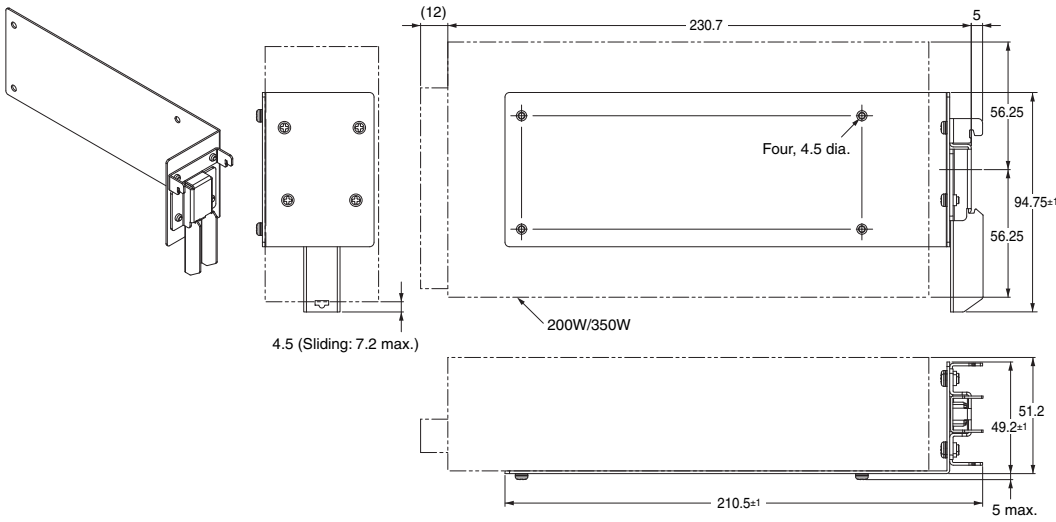

Mounting Method

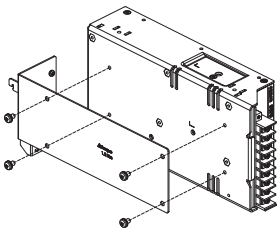

Accessories (4 locations)
Be sure to use the accessory screws.
Mounting screw tightening torque:
1.08 to 1.32 N·m for M4 screws

S82Y-FSC015DIN-S

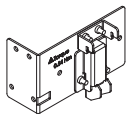

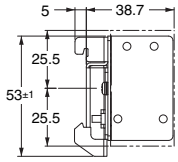

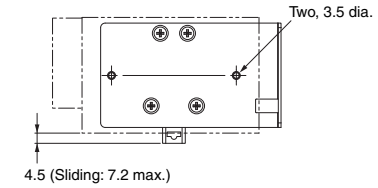

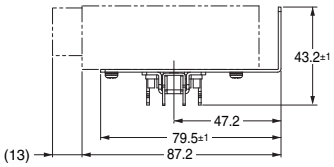

Mounting Method

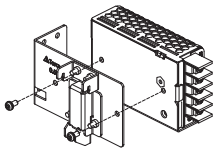

Accessories (2 locations)
Be sure to use the accessory screws.
Mounting screw tightening torque: 0.48 to 0.59 N·m for M3 screws

S82Y-FSC025DIN-S

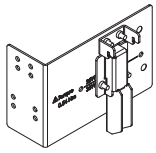

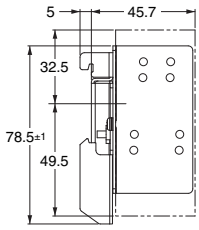

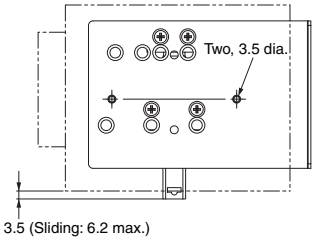

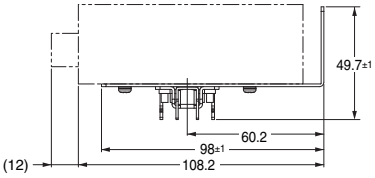

Mounting Method

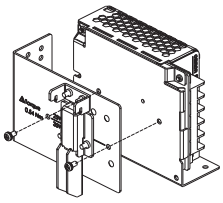

Accessories (2 locations)
Be sure to use the accessory screws.
Mounting screw tightening torque: 0.48 to 0.59 N·m for M3 screws

S82Y-FSC035DIN-S

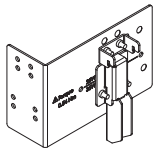

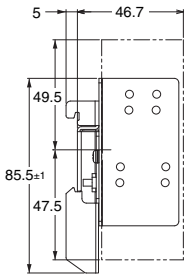

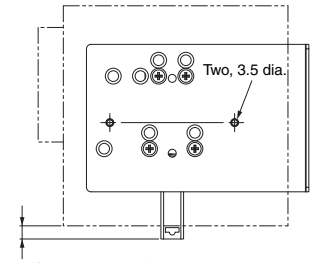

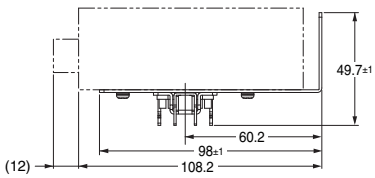

Mounting Method

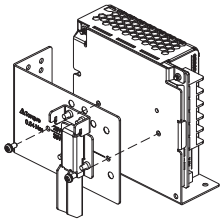

Accessories (2 locations)
Be sure to use the accessory screws.
Mounting screw tightening torque: 0.48 to 0.59 N·m for M3 screws

S82Y-FSC050DIN-S

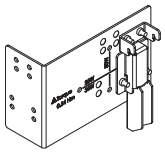

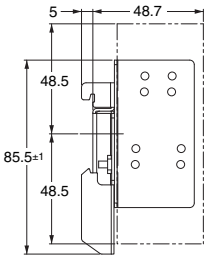

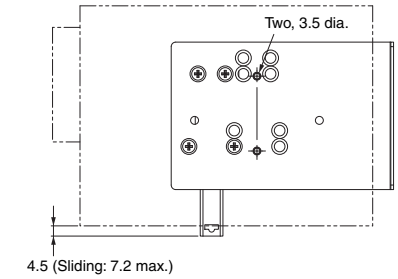

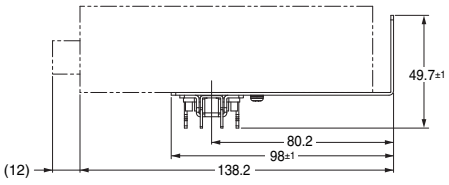

Mounting Method

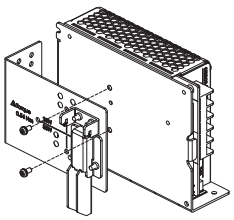

Accessories (2 locations)
Be sure to use the accessory screws.
Mounting screw tightening torque: 0.48 to 0.59 N·m for M3 screws

S82Y-FSC100DIN-S

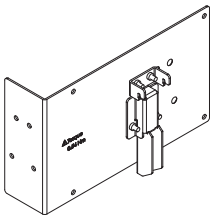

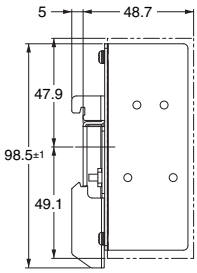

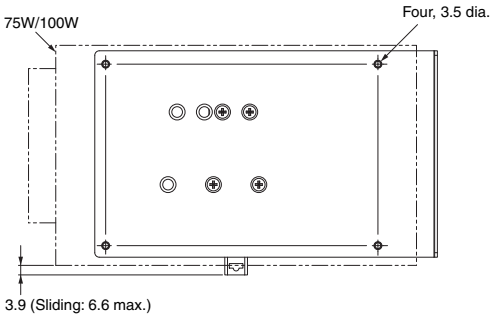

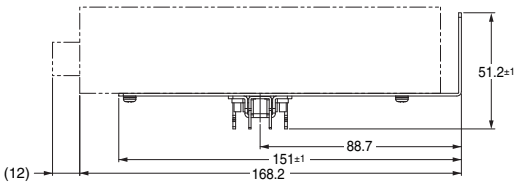

Mounting Method

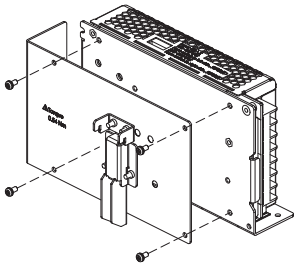

Accessories (4 locations)
Be sure to use the accessory screws.
Mounting screw tightening torque: 0.48 to 0.59 N·m for M3 screws

S82Y-FSC150DIN-S

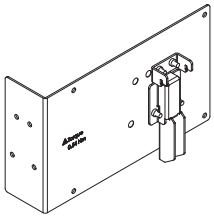

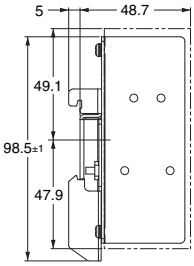

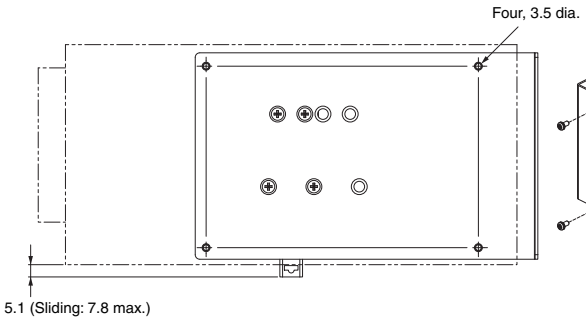

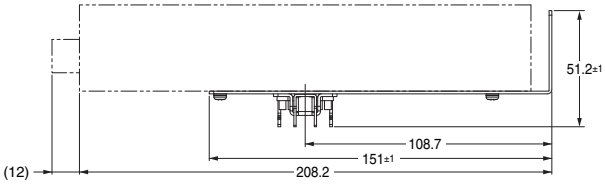

Mounting Method

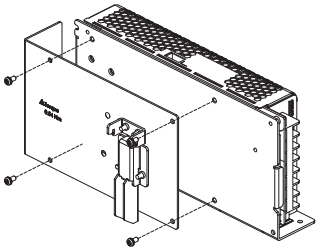

Accessories (4 locations)
Be sure to use the accessory screws.
Mounting screw tightening torque: 0.48 to 0.59 N·m for M3 screws

S82Y-FSC350B (Four Brackets)

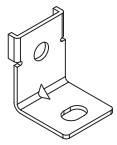

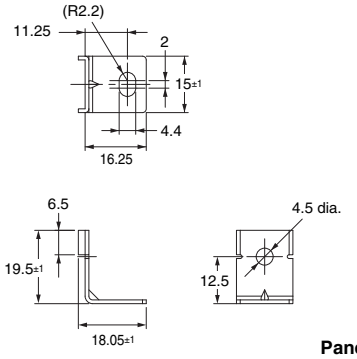

Mounting Method

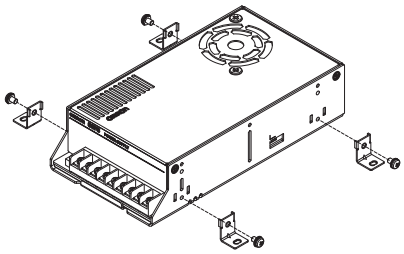

Accessories (4 locations)

Be sure to use the accessory screws.
Mounting screw tightening torque: 1.08 to 1.32 N·m for M4 screws

Note: The mounting bracket is available in 200-W and 350-W models. The figure shows a 350-W Power Supply.

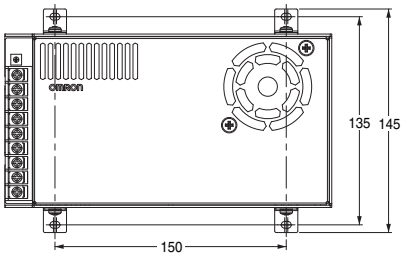

Panel mounting hole dimensions

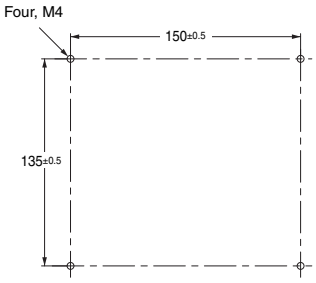

For Users of S8JC DIN Rail-mounting Power Supplies

If you are using a DIN Rail-mounting S8JC-series Power Supply, you can use a DIN Rail-mounting S8FS-C-series Power Supply or replace it with an S8FS-C-series Power Supply with a Forward-facing Terminal Block and a DIN Rail Mounting Bracket.

Table of Corresponding S8JC Power Supplies and S8FS-C□J Power Supplies with DIN Rail Mounting Brackets

Power rating	S8JC-Z ✻2	S8JC-ZS		S8FS-C Power Supply		DIN Rail-mounting Bracket ✻1
15 W	S8JC-Z01505CD	S8JC-ZS01505CD-AC2	⇒	S8FS-C01505J	+	S82Y-FSC015DIN
	S8JC-Z01512CD	S8JC-ZS01512CD-AC2	⇒	S8FS-C01512J		
	S8JC-Z01524CD	S8JC-ZS01524CD-AC2	⇒	S8FS-C01524J		
35 W	S8JC-Z03505CD	S8JC-ZS03505CD-AC2	⇒	S8FS-C03505J	+	S82Y-FSC050DIN
	S8JC-Z03512CD	S8JC-ZS03512CD-AC2	⇒	S8FS-C03512J		
	S8JC-Z03524CD	S8JC-ZS03524CD-AC2	⇒	S8FS-C03524J		
50 W	S8JC-Z05005CD	S8JC-ZS05005CD-AC2	⇒	S8FS-C05005J	+	S82Y-FSC050DIN
	S8JC-Z05012CD	S8JC-ZS05012CD-AC2	⇒	S8FS-C05012J		
	S8JC-Z05024CD	S8JC-ZS05024CD-AC2	⇒	S8FS-C05024J		
	S8JC-Z05048CD	---	⇒	S8FS-C05048J		
100 W	S8JC-Z10005CD	S8JC-ZS10005CD-AC2	⇒	S8FS-C10005J	+	S82Y-FSC150DIN
	S8JC-Z10012CD	S8JC-ZS10012CD-AC2	⇒	S8FS-C10012J		
	S8JC-Z10024CD	S8JC-ZS10024CD-AC2	⇒	S8FS-C10024J		
	S8JC-Z10048CD	---	⇒	S8FS-C10048J		
150 W	S8JC-Z15005CD	S8JC-ZS15005CD-AC2	⇒	S8FS-C15005J	+	S82Y-FSC150DIN
	S8JC-Z15012CD	S8JC-ZS15012CD-AC2	⇒	S8FS-C15012J		
	S8JC-Z15024CD	S8JC-ZS15024CD-AC2	⇒	S8FS-C15024J		
	S8JC-Z15048CD	---	⇒	S8FS-C15048J		
350 W	S8JC-Z35005CD	S8JC-ZS35005CD-AC2	⇒	S8FS-C35005J	+	S82Y-FSC350DIN
	S8JC-Z35012CD	S8JC-ZS35012CD-AC2	⇒	S8FS-C35012J		
	S8JC-Z35024CD	S8JC-ZS35024CD-AC2	⇒	S8FS-C35024J		

✻1. To mount an S8FS-series Power Supply that is not a DIN Rail-mounting model to a DIN Rail, purchase a DIN Rail-mounting Bracket separately from the Power Supply.
✻2. Consult with your OMRON representative if you use a 15-W or 35-W S8JC-Z Power Supply with a 48-V output voltage.

DIN Rail (Order Separately)

Note: All units are in millimeters unless otherwise indicated.

Mounting Rail (Material: Aluminum)

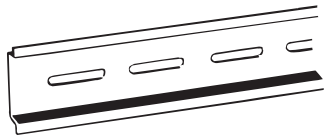

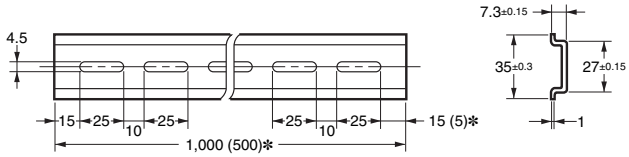

✻ Value in parentheses are for PFP-50N.

Model
PFP-100N
PFP-50N

Mounting Rail (Material: Aluminum)

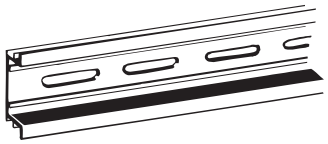

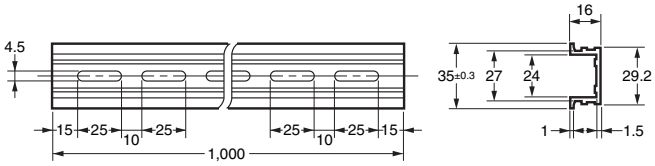

Model
PFP-100N2

End Plate

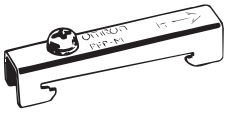

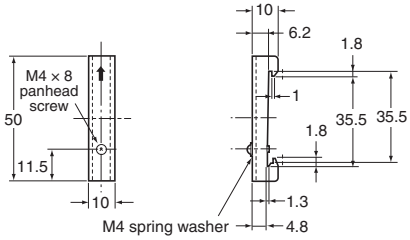

Model
PFP-M

Note: 1. If there is a possibility that the Power Supply will be subject to vibration or shock, use a steel DIN Rail. Otherwise, metallic filings may result from aluminum abrasion.

2. If there is a possibility of the Power Supply sliding sideways, place an End Plate (PFP-M) on each end of the Power Supply.

Terminal Cover (Order Separately)

Terminal block direction	Power rating	Applicable models	Terminal Cover model number
Models with terminal block facing upward	25-W	S8FS-C025□□	S82Y-FSC-C5
	35-W	S8FS-C035□□	
	50-W	S8FS-C050□□	
	75-W	S8FS-C075□□	
	100-W	S8FS-C100□□	S82Y-FSC-C7
	150-W	S8FS-C150□□	
	200-W	S8FS-C200□□	S82Y-FSC-C9
	350-W	S8FS-C350□□	
Models with terminal block facing forward	15-W	S8FS-C015□□J/D	S82Y-FSC-C5MF
	25-W	S8FS-C025□□J/D	S82Y-FSC-C5F
	35-W	S8FS-C035□□J/D	
	50-W	S8FS-C050□□J/D	
	75-W	S8FS-C075□□J/D	
	100-W	S8FS-C100□□J/D	S82Y-FSC-C7F
	150-W	S8FS-C150□□J/D	
	200-W	S8FS-C200□□J/D	S82Y-FSC-C9F
	350-W	S8FS-C350□□J/D	

Safety Precautions

Refer to Safety Precautions for All Power Supplies.

Warning Indications

CAUTION	**Indicates a potentially hazardous situation which, if not avoided, may result in minor or moderate injury or in property damage.**
Precautions for Safe Use	**Supplementary comments on what to do or avoid doing, to use the product safely.**
Precautions for Correct Use	**Supplementary comments on what to do or avoid doing, to prevent failure to operate, malfunction or undesirable effect on product performance.**

Meaning of Product Safety Symbols

	Indicates the possibility of electric shock under specific conditions.
	Indicates the possibility of injuries by high temperature under specific conditions.
	Indicates the possibility of injuries, such as electric shock by disassembling the device, prohibiting disassembly.
	Indicates the instructions of unspecified general action.

⚠ CAUTION

Minor electric shock, fire, or Product failure may occasionally occur. Do not disassemble, modify, or repair the Product or touch the interior of the Product.

Minor burns may occasionally occur. Do not touch the Product while power is being supplied or immediately after power is turned OFF.

Fire may occasionally occur. Tighten terminal screws to the specified torque.
S8FS-C015□□J: 4.25 to 5.13 lb-in (0.48 to 0.58 N·m)
Other than S8FS-C015□□J: 6.55 to 7.78 lb-in (0.74 to 0.88 N·m)

Minor injury due to electric shock may occasionally occur. Do not touch the terminals while power is being supplied.

Minor electric shock, fire, or Product failure may occasionally occur. Do not allow any pieces of metal or conductors or any clippings or cuttings resulting from installation work to enter the Product.

Precautions for Safe Use

Ambient Operating and Storage Environments

- Store the Power Supply at a temperature of –40 to 85°C and a humidity of 10% to 95%.
- The internal parts may occasionally deteriorate or be damaged. Use the standard mounting method only. Do not use the Power Supply outside the derating range.
- Use the Power Supply at a humidity of 20% to 90%.
- Do not use the Power Supply in locations subject to direct sunlight.
- Do not use the Power Supply in locations where liquids, foreign matter, or corrosive gases may enter the interior of the Power Supplies.

Installation Environment

- Do not use the Power Supply in locations subject to shocks or vibrations. Install the Power Supply away from contactors and other parts and devices that are sources of vibration.
- Install the Power Supply well away from any sources of strong, high-frequency noise and surge.

Input Voltage Selector Switch

- For 100-W or higher models, the input voltage is factory-set to 200 to 240 V.
  To use an input voltage of 100 to 120 VAC, change the input voltage selector switch to the 100 to 120 VAC setting.
  To use a DC input, set the input voltage selector switch to the 200 to 240 VAC setting.
- Minor electric shock may occasionally occur. Do not operate the input voltage selector switch while power is being supplied.

Mounting

- Take adequate measures to ensure proper heat dissipation to increase the long-term reliability of the Power Supply.
- For models other than the S8FS-C350□□□, be sure to allow convection in the atmosphere around devices when mounting. Do not use the Power Supply in locations where the ambient temperature exceeds the range of the derating curve.
- For the S8FS-C350□□□: Forced air cooling with a fan is used. Do not allow the ventilation holes to be blocked. The effectiveness of cooling would be reduced.
- The internal parts may occasionally deteriorate or be damaged. Use the standard mounting method only. Do not use the Power Supply outside the derating range.
- If you mount the Power Supply by using the screw holes provided on the chassis, the screws should preferably not penetrate beyond the exterior by more than 3 mm inside the Power Supply. If you use screws that are longer than this, make sure that they do not penetrate beyond the depth given in the dimensional diagram. Use the following tightening torque.
  0.48 to 0.59 N·m for M3 screws
  1.08 to 1.32 N·m for M4 screws
- When cutting out holes for mounting, make sure that cuttings do not enter the interior of the Power Supplies.
- The internal parts may occasionally deteriorate or be damaged due to adverse heat radiation. Do not loosen the screws on the Power Supplies.

Mounting

The standard mounting pattern is shown below.

Mounting Pattern A

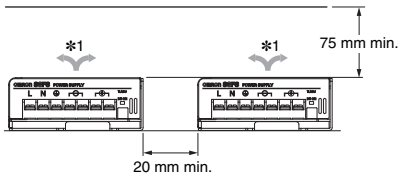

The above figure shows a model with the terminal block facing upward.

Mounting Pattern B

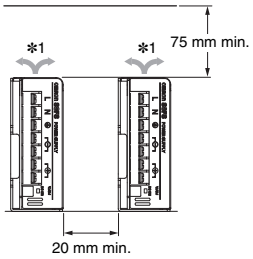

The above figure shows a model with the terminal block facing upward.

Mounting Pattern C *2

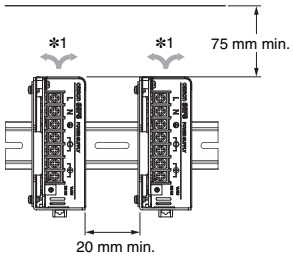

The above figure shows a model with the terminal block facing forward.

Mounting Pattern D *2

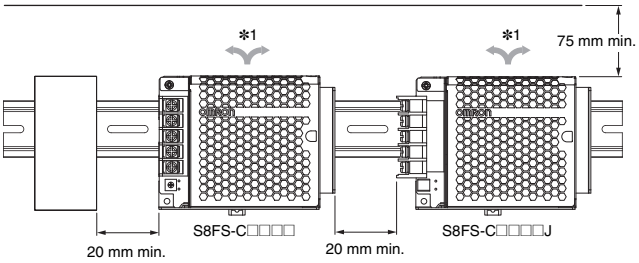

To mount the Power Supply to a DIN Rail, hook portion (A) of the Power Supply onto the DIN Rail and press the Power Supply in direction (B) until you hear it lock into place. Make sure that the catch on the Mounting Bracket is engaged with the DIN Rail.

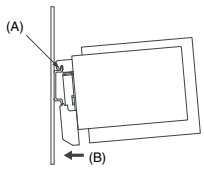

To dismount the Power Supply, pull down portion (C) with a flat-blade screwdriver and pull out the Power Supply.

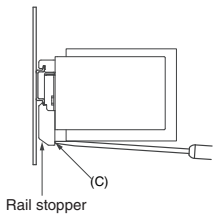

***1.** Air flow

***2.** For mounting patterns C and D, a separately sold Mounting Bracket is used to mount the Power Supplies to DIN Rail. Refer to *Mounting Brackets (Order Separately)* on page 29 for the separately sold Mounting Brackets.

Wiring

- Connect the ground completely.
  A protective earthing terminal stipulated in safety standards is used. Electric shock or malfunction may occur if the ground is not connected completely.
- Minor fire may possibly occur. Ensure that input and output terminals are wired correctly.
- Do not apply more than 75 N force to the terminal block when tightening it.
- Be sure to remove the sheet covering the Power Supply for machining before power-ON so that it does not interfere with heat dissipation.
- Use the following material for the wires to be connected to the S8FS-C to prevent smoking or ignition caused by abnormal loads.

Recommended Wire Gauges

Terminals	Model	Recommended Wire Gauges
Input	S8FS-C015□□□	AWG14 to 22
	S8FS-C025□□□ to S8FS-C100□□□	AWG12 to 20
	S8FS-C150□□□ or S8FS-C200□□□	AWG12 to 16
	S8FS-C350□□□	AWG12
Output	S8FS-C015□□□	AWG14 to 18
	S8FS-C02512 to S8FS-C02524□	AWG12 to 20
	S8FS-C03515 to S8FS-C03524□	
	S8FS-C05024 to S8FS-C05048□	
	S8FS-C02505 or S8FS-C03512□	AWG12 to 16
	S8FS-C05012 to S8FS-C05015□	
	S8FS-C07515 to S8FS-C07548□	
	S8FS-C10024 to S8FS-C10048□	
	S8FS-C15036 to S8FS-C15048□	
	S8FS-C03505 or S8FS-C05005□	AWG12
	S8FS-C07505 to S8FS-C07512□	
	S8FS-C10005 to S8FS-C10015□	
	S8FS-C15005 to S8FS-C15024□	
	S8FS-C200□□□ or S8FS-C350□□□	
Protective earth terminal	S8FS-C015□□□	AWG14
	S8FS-C025□□□ to S8FS-C350□□□	AWG12 to 14

Note: The current capacity for the output terminals on the S8FS-C025□□□ to S8FS-C350□□□ is 25 A for each terminal. Make sure to use multiple terminals together if the current flow is higher than the current capacity for each terminal.

Overload Protection

- If the Power Supply has been short-circuited or supplied with an overcurrent longer than 10 seconds, the internal parts of the Power Supply may occasionally deteriorate or be damaged.
- Internal parts may possibly deteriorate or be damaged if the Power Supply is used for applications with frequent inrush current or overloading at the load end. Do not use the Power Supply for such applications.

Output Voltage Adjuster (V. ADJ)

- The output voltage adjuster (V. ADJ) may possibly be damaged if it is turned with unnecessary force. Do not turn the adjuster with excessive force.
- After completing output voltage adjustment, be sure that the output capacity or output current does not exceed the rated output capacity or rated output current.

Series Operation

Two Power Supplies can be connected in series.

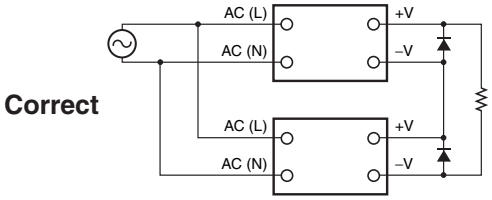

Note: 1. If the load is short-circuited, a reverse voltage will be generated inside the Power Supply. If this occurs the Power Supply may possibly deteriorate or be damaged. Always connect a diode as shown in the figure. Select a diode having the following ratings.

Type	Schottky Barrier diode
Dielectric strength (V_{RRM})	Twice the rated output voltage or above
Forward current (I_F)	Twice the rated output current or above

2. Although Power Supplies having different specifications can be connected in series, the current flowing through the load must not exceed the smaller rated output current.

Making Positive/Negative Outputs

- The outputs are floating outputs (i.e., the primary circuits and secondary circuits are separated). You can therefore make positive and negative outputs by using two Power Supplies. You can make positive and negative outputs with any of the models. If positive and negative outputs are used, connect Power Supplies of the same model as shown in the following figure. (Combinations with different output capacities or output voltages can be made. However, use the lower of the two maximum rated output currents as the current to the loads.)

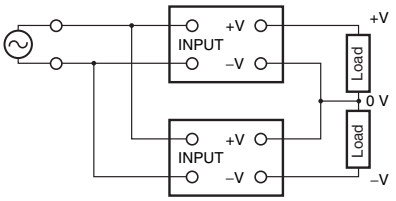

- Depending on the model, internal circuits may be damaged due to startup failure when the power is turned ON if loads such as a servomotor or operational amplifier operate in series. Therefore, connect bypass diodes (D_1, D_2) as shown in the following figure.

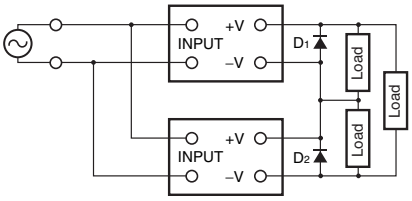

- Select a diode having the following ratings.

Type	Schottky Barrier diode
Dielectric strength (V_{RRM})	Twice the rated output voltage or above
Forward current (I_F)	Twice the rated output current or above

Parallel Operation

Parallel operation is not possible.

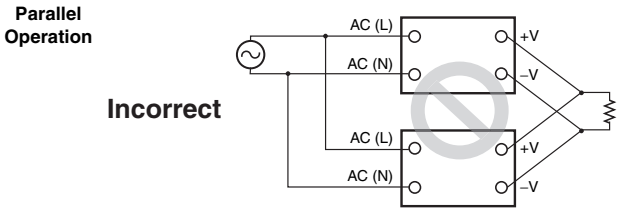

Backup Operation

Backup operation is possible if you use two Power Supplies of the same model.
Connect diodes as shown in the following figure for backup operation.

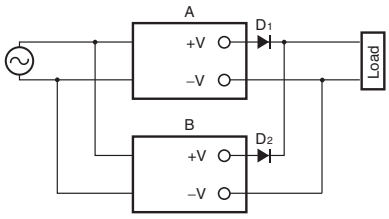

Select a diode having the following ratings.

Type	Schottky Barrier diode
Dielectric strength (V_{RRM})	Twice the rated output voltage or above
Forward current (I_F)	Twice the rated output current or above

- The output voltages of Power Supplies A and B output must be set higher only by a value equivalent to the drop in forward voltages (V_F) of diodes D_1 and D_2.
- Power loss occurs equivalent to the Power Supply output current (I_{OUT}) times the diode forward voltage (V_F), and heat is generated. The diode must be cooled to ensure that its temperature is kept at or below the value indicated in the diode catalog.
- There will be a power loss caused by load power and diodes. Be sure that this total power loss does not exceed the rated output power (rated output voltage times rated output current) of each Power Supply.

In Case There Is No Output Voltage

There is a possibility that functions such as overcurrent protection, over-voltage protection or overheating protection are functioning. The internal protection circuit may operate if a large amount of surge voltage such as a lightening surge occurs while turning ON the Power Supply.
In case there is no output voltage, please check the following points before contacting us:

- Checking overload protection status:
  Check whether the load is in overload status or is short-circuited. Remove wires to load when checking.
- Checking overvoltage or internal protection:
  Turn the power supply OFF once, and leave it OFF for at least 3 minutes. Then turn it ON again to see if this clears the condition.
- Check overheating protection (350-W model):
  Switch off the input power supply and switch back on after allowing sufficient time for cooling.

Charging Batteries

If you connect a battery at the load, install overcurrent control and overvoltage protection circuits.

Period and Terms of Warranty

Warranty Period

The Power Supply warranty is valid for a period of three years from the date of shipment from the factory.

Terms of Warranty

The warranty is valid only for the following operating conditions.
1. Average ambient operating temperature of the Power Supply: 40°C max.
2. Average load rate: 80% max.
3. Mounting method: Standard mounting

✻ The maximum ratings must be within the derating curve.

If the Power Supply fails for reasons attributable to OMRON within the above warranty period, OMRON will repair or replace the faulty part of the Power Supply at the place of purchase or the place where the Power Supply delivered without charge.
This warranty does not cover the following types of failures.

(1) Failures that result from handling or operation of the Power Supply under conditions or in environments that are not given in this document and not given in any other specifications exchanged between OMRON and the customer
(2) Failures that originate in causes other than the delivered product itself
(3) Failures caused by disassembly, modification, or repair of the Power Supply by anyone other than OMRON
(4) Failures caused by applications or uses for which the Power Supply was not originally intended
(5) Failures caused by factors that could not be anticipated with the scientific or technical knowledge available when the Power Supply was shipped
(6) Failures caused by other causes for which OMRON is not responsible, such as natural disasters and other acts of God
This warranty is limited to the individual product that was delivered and does not cover any secondary, subsequent, or related damages.

Recommended Replacement Periods and Periodic Replacement for Preventive Maintenance

The recommended replacement period for preventive maintenance is greatly influenced by the application environment of the Power Supply. As a guideline, the recommended replacement period is 7 to 10 years.✻ To prevent failures and accidents that can be caused by using a Power Supply beyond its service life, we recommend that you replace the Power Supply as early as possible within the recommended replacement period. However, bear in mind that the recommended replacement period is for reference only and does not guarantee the life of the Power Supply.

Many electronic components are used in the Power Supply and the Power Supply depends on the correct operation of these components to achieve the original Power Supply functions and performance. However, the influence of the ambient temperature on aluminum electrolytic capacitors is large, and the service life is reduced by half for each 10°C rise in temperature (Arrhenius law). When the capacity reduction life of the electrolytic capacitor is reached, Power Supply failures or accidents may occur. We therefore recommend that you replace the Power Supply periodically to minimize Power Supply failures and accidents in advance.

✻ The recommended replacement period applies under the following conditions: rated input voltage, load rate of 50% max., ambient temperature of 40°C max., and the standard mounting method. (The fan is excluded for models with fans.)

This product model is designed with a service life of 10 years minimum under the above conditions.

MEMO

Terms and Conditions Agreement

Read and understand this catalog.

Please read and understand this catalog before purchasing the products. Please consult your OMRON representative if you have any questions or comments.

Warranties.

(a) Exclusive Warranty. Omron's exclusive warranty is that the Products will be free from defects in materials and workmanship for a period of twelve months from the date of sale by Omron (or such other period expressed in writing by Omron). Omron disclaims all other warranties, express or implied.

(b) Limitations. OMRON MAKES NO WARRANTY OR REPRESENTATION, EXPRESS OR IMPLIED, ABOUT NON-INFRINGEMENT, MERCHANTABILITY OR FITNESS FOR A PARTICULAR PURPOSE OF THE PRODUCTS. BUYER ACKNOWLEDGES THAT IT ALONE HAS DETERMINED THAT THE PRODUCTS WILL SUITABLY MEET THE REQUIREMENTS OF THEIR INTENDED USE.

Omron further disclaims all warranties and responsibility of any type for claims or expenses based on infringement by the Products or otherwise of any intellectual property right. (c) Buyer Remedy. Omron's sole obligation hereunder shall be, at Omron's election, to (i) replace (in the form originally shipped with Buyer responsible for labor charges for removal or replacement thereof) the non-complying Product, (ii) repair the non-complying Product, or (iii) repay or credit Buyer an amount equal to the purchase price of the non-complying Product; provided that in no event shall Omron be responsible for warranty, repair, indemnity or any other claims or expenses regarding the Products unless Omron's analysis confirms that the Products were properly handled, stored, installed and maintained and not subject to contamination, abuse, misuse or inappropriate modification. Return of any Products by Buyer must be approved in writing by Omron before shipment. Omron Companies shall not be liable for the suitability or unsuitability or the results from the use of Products in combination with any electrical or electronic components, circuits, system assemblies or any other materials or substances or environments. Any advice, recommendations or information given orally or in writing, are not to be construed as an amendment or addition to the above warranty.

See http://www.omron.com/global/ or contact your Omron representative for published information.

Limitation on Liability; Etc.

OMRON COMPANIES SHALL NOT BE LIABLE FOR SPECIAL, INDIRECT, INCIDENTAL, OR CONSEQUENTIAL DAMAGES, LOSS OF PROFITS OR PRODUCTION OR COMMERCIAL LOSS IN ANY WAY CONNECTED WITH THE PRODUCTS, WHETHER SUCH CLAIM IS BASED IN CONTRACT, WARRANTY, NEGLIGENCE OR STRICT LIABILITY.

Further, in no event shall liability of Omron Companies exceed the individual price of the Product on which liability is asserted.

Suitability of Use.

Omron Companies shall not be responsible for conformity with any standards, codes or regulations which apply to the combination of the Product in the Buyer's application or use of the Product. At Buyer's request, Omron will provide applicable third party certification documents identifying ratings and limitations of use which apply to the Product. This information by itself is not sufficient for a complete determination of the suitability of the Product in combination with the end product, machine, system, or other application or use. Buyer shall be solely responsible for determining appropriateness of the particular Product with respect to Buyer's application, product or system. Buyer shall take application responsibility in all cases.

NEVER USE THE PRODUCT FOR AN APPLICATION INVOLVING SERIOUS RISK TO LIFE OR PROPERTY OR IN LARGE QUANTITIES WITHOUT ENSURING THAT THE SYSTEM AS A WHOLE HAS BEEN DESIGNED TO ADDRESS THE RISKS, AND THAT THE OMRON PRODUCT(S) IS PROPERLY RATED AND INSTALLED FOR THE INTENDED USE WITHIN THE OVERALL EQUIPMENT OR SYSTEM.

Programmable Products.

Omron Companies shall not be responsible for the user's programming of a programmable Product, or any consequence thereof.

Performance Data.

Data presented in Omron Company websites, catalogs and other materials is provided as a guide for the user in determining suitability and does not constitute a warranty. It may represent the result of Omron's test conditions, and the user must correlate it to actual application requirements. Actual performance is subject to the Omron's Warranty and Limitations of Liability.

Change in Specifications.

Product specifications and accessories may be changed at any time based on improvements and other reasons. It is our practice to change part numbers when published ratings or features are changed, or when significant construction changes are made. However, some specifications of the Product may be changed without any notice. When in doubt, special part numbers may be assigned to fix or establish key specifications for your application. Please consult with your Omron's representative at any time to confirm actual specifications of purchased Product.

Errors and Omissions.

Information presented by Omron Companies has been checked and is believed to be accurate; however, no responsibility is assumed for clerical, typographical or proofreading errors or omissions.

OMRON Corporation **Industrial Automation Company**
Kyoto, JAPAN

Contact: www.ia.omron.com

Regional Headquarters

OMRON EUROPE B.V.
Wegalaan 67-69, 2132 JD Hoofddorp
The Netherlands
Tel: (31)2356-81-300/Fax: (31)2356-81-388

OMRON ELECTRONICS LLC
2895 Greenspoint Parkway, Suite 200
Hoffman Estates, IL 60169 U.S.A.
Tel: (1) 847-843-7900/Fax: (1) 847-843-7787

OMRON ASIA PACIFIC PTE. LTD.
No. 438A Alexandra Road # 05-05/08 (Lobby 2),
Alexandra Technopark,
Singapore 119967
Tel: (65) 6835-3011/Fax: (65) 6835-2711

OMRON (CHINA) CO., LTD.
Room 2211, Bank of China Tower,
200 Yin Cheng Zhong Road,
PuDong New Area, Shanghai, 200120, China
Tel: (86) 21-5037-2222/Fax: (86) 21-5037-2200

Authorized Distributor:

© OMRON Corporation 2015-2020 All Rights Reserved.
In the interest of product improvement,
specifications are subject to change without notice.

CSM_3_1
Cat. No. T062-E1-05 1120 (0915)